NINETEENTH EUROPEAN ROTORCRAFT FORUM

Paper No. 02

MD EXPLORER DEVELOPMENT AND TEST

by

EVAN SAMPATACOS
McDONNELL DOUGLAS HELICOPTER COMPANY

September 14-16, 1993
CERNOBBIO (Como)
ITALY

ASSOCIAZIONE INDUSTRIE AEROSPAZIALI
ASSOCIAZIONE ITALIANA DI AERONAUTICA ED ASTRONAUTICA

MD EXPLORER DEVELOPMENT AND TEST

Evan Sampatacos
Director, Commercial Engineering
McDonnell Douglas Helicopter Company
Mesa, Arizona

Abstract

The conception of the MD Explorer (formerly MDX) is recapped. The program began with customer surveys which defined the desired vehicle characteristics including payload, cabin volume, range, speed, and hover capability. This was followed by the choice of product technologies appropriate to achieving the desired characteristics including a hybrid metallic/composite structure, a bearingless, composite rotor system, and the NOTAR® anti-torque system. The chosen design process was also innovative, including 100% computer-aided design, utilization of an electronic design fixture in lieu of physical mockups, and taking advantage of ongoing interaction with a customer advisory group, the Blue Team. Programmatic risk was minimized by choosing an international team of contractors to execute the task. Figure 1 shows the MD Explorer.

The hybrid metallic/composite airframe structure is described, as are structural tests, including static tests of both prototype and production fuselage configurations.

The bearingless composite rotor is described. Development fatigue tests of the flexbeam, pitchcase, and blade led to the successful whirl test of a prototype rotor at McDonnell Douglas Helicopter Company (MDHC) and then to a successful test in the 40x80 wind tunnel at NASA-Ames. Subsequent fatigue qualification testing of the hub is described.

Testing of the MD Explorer NOTAR® system is described, including development to define fan performance, increase thrust, and reduce manufacturing cost.

Utilization of the first complete MD Explorer as a ground test vehicle is described. Drive-train/engine/rotor and NOTAR® integration was accomplished on this unit to clear the second MD Explorer for flight.

The first flight of the MD Explorer took place on December 18, 1992, using the second vehicle. The flight envelope attained since first flight is described.

Figure 1. MD Explorer

®NOTAR is a registered trademark of McDonnell Douglas Helicopter Company.

Presented at the Nineteenth European Rotorcraft Forum, September 14-16, 1993, CERNOBBIO, Italy.

Introduction

In 1987, McDonnell Douglas embarked on a worldwide survey of helicopter operators to define the desired characteristics of a new-generation 2- to 4-metric tonne class utility helicopter. Our goal was to define a set of design criteria for a multimission helicopter which would serve more than a single market segment and meet the more stringent regulatory requirements growing out of public acceptability issues such as rotorcraft noise.

The methodology was straightforward: the cumulative percentage of respondents was plotted versus the value they desired for each design parameter surveyed. The data typically exhibited a character like that of Figure 2, with a distinct "knee" in the curve. Clearly, the operators found increasing capability desirable up to a certain level, but there was little additional appeal above that point. For example, Figure 2 shows that a 3,000-pound sling load capability satisfied the requirements of more than 90% of the operators surveyed. Figure 3 is a summary of the design goals defined in this way for the new helicopter, by then designated MDX.

In order to maintain customer focus during the design process, a unique innovation was developed: a customer advisory group called the Blue Team. As the MDX design evolved, the Blue Team reviewed its progress and applicability to their requirements. A number of design improvements were the direct result of Blue Team suggestions. By 1991, MDX performance had evolved to that shown in Figure 4, which was accepted by the Blue Team at the Critical Design Review (CDR) in mid-year. Maintaining customer focus in this manner proved to be rewarding, as over 250 Certificates of Interest (COI) with deposits had been received for MDX aircraft prior to the CDR.

Payload:	
- Internal	2,000 pounds
- External	3,000 pounds
Range:	370 nautical miles
Cruise Speed:	
- Sea Level ISA	150 knots
- Sea Level 100 °F	150 knots
Hover Out of Ground Effect:	
- ISA	10,000 feet
Hover In Ground Effect, One Engine Inoperative:	
- Gross Weight	5,400 pounds

Figure 3. Initial Design Goals

Payload:	
- Internal	1,600 pounds
- External	3,000 pounds
Range:	330 nautical miles
Cruise Speed:	
- Sea Level ISA	141 knots
- Sea Level 100 °F	142 knots
Hover Out of Ground Effect:	
- ISA	10,700 feet
Hover In Ground Effect, One Engine Inoperative:	
- Gross Weight	5,380 pounds

Figure 4. Goals Accepted by Blue Team

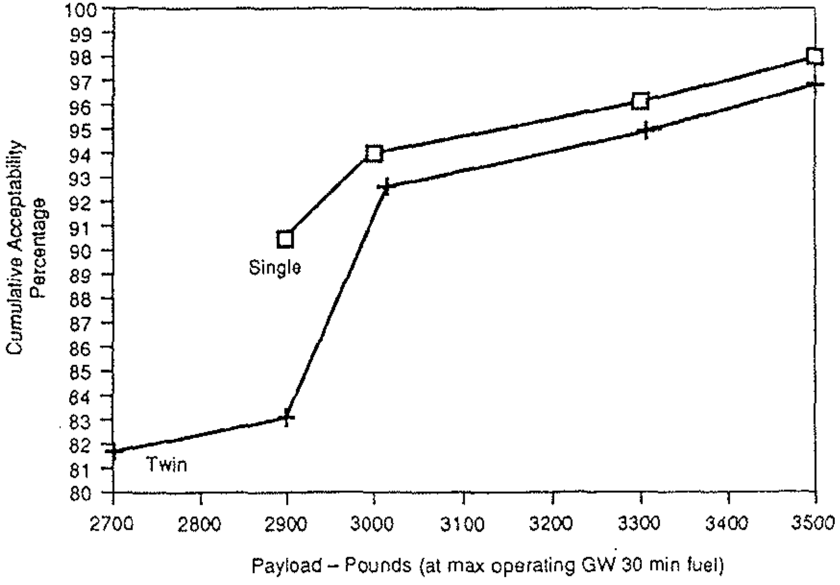

Figure 2. Desired Level of External Sling Payload

Reference 1 and Reference 2 provide more details of the MDX design evolution.

This paper summarizes development and testing since CDR which have led the MDX to become the MD Explorer.

Computer-Aided Design

The MD Explorer is the first MDHC aircraft to be designed fully using computer-aided design (CAD) methods. Since this program was a new start, it was decided to take maximum advantage of the capabilities of the Unigraphics II CAD system by revising some of the time-honored methods used to design aircraft.

The first innovation was to define the three-dimensional (3-D) computer models of parts, assemblies, and installations as the "Master" rather than two-dimensional (2-D) drawings. 2-D drawings then become multiple views of the 3-D models.

The 3-D models are required to support the second innovation, the use of an electronic mockup or electronic development fixture (EDF) instead of a physical mockup. The EDF shows the location of all parts of the MD Explorer accurately arrayed in space. It provides a single, current, centralized database which all designers on the program use to ensure all components fit and meet minimum clearance requirements.

CAD application and the EDF are discussed in greater depth in Reference 2.

CAD use made another innovation in the design process possible. Top-level MD Explorer installation models reflect the manner in which the aircraft is actually assembled, incorporating parts from many subsystems, rather than being divided by subsystem. Figure 5, Rotor Support Buildup, is a typical example. It includes parts which would have otherwise been presented in separate rotor, airframe, control, and drive system installations. Figure 6 is a photograph of the actual installation. The advantage of the Figure 5 presentation to a production planner or a maintainer is obvious.

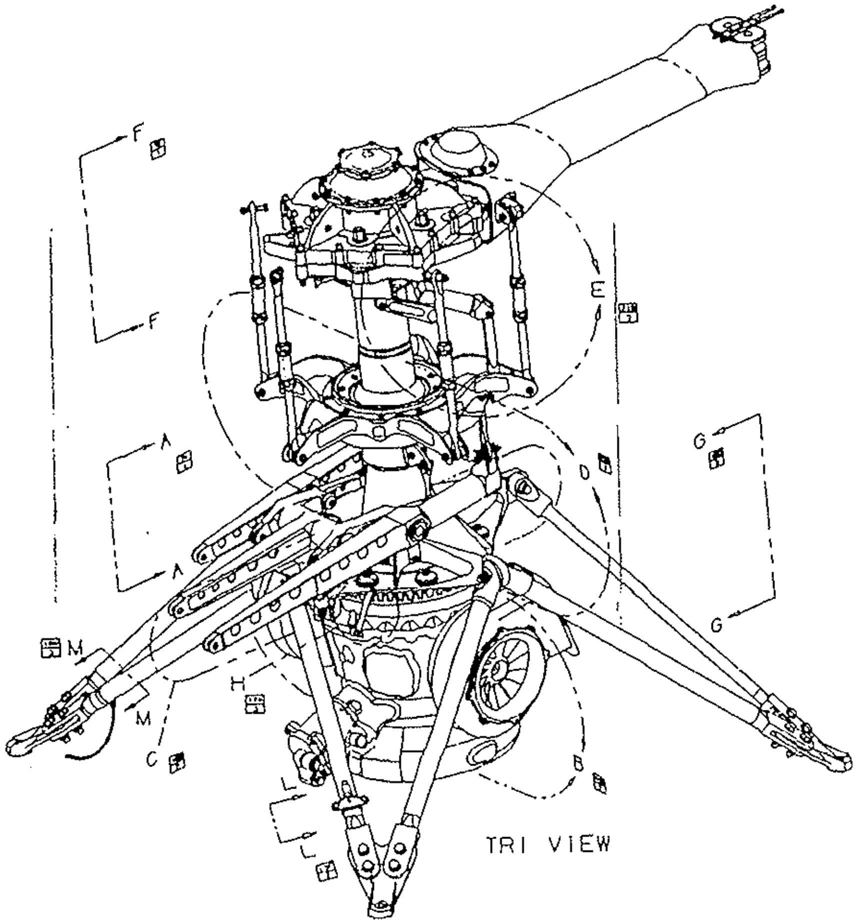

Figure 5. Rotor Support Buildup

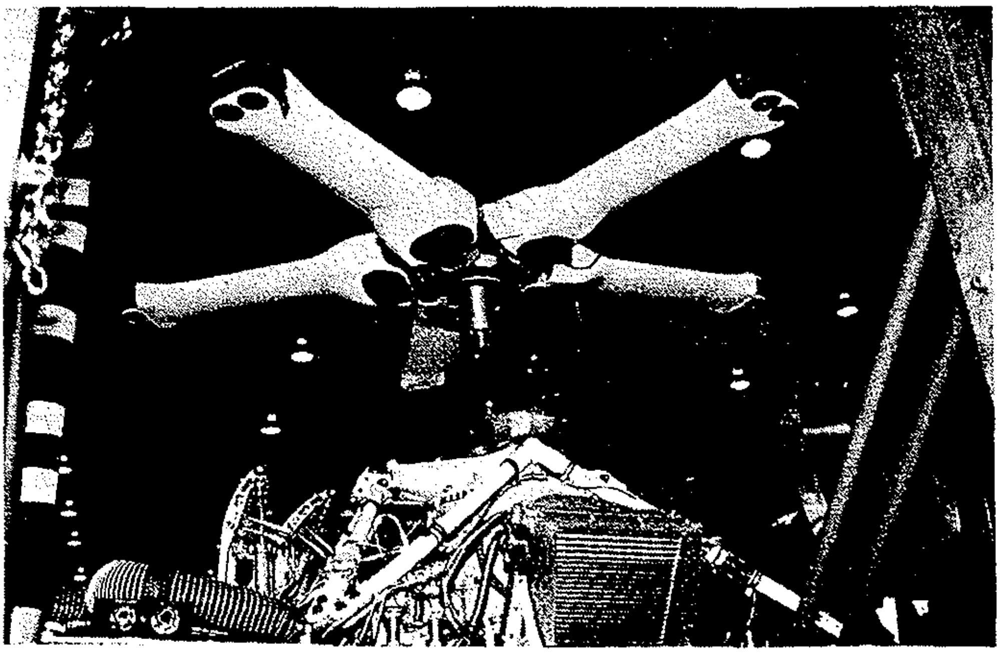

Figure 6. Rotor Support

Airframe

The MD Explorer airframe is composed of three major components: the rotor support, the fuselage, and the tailboom/empennage.

The rotor support structure, already shown in Figures 5 and 6, represents a continuation of the MDHC static mast concept. All rotor loads except torque are reacted in the fixed static mast at the rotor head. Proven in over 25 years of service on the MD 500 series and the AH-64, this system affords superior safety through structural redundancy, vibration reduction through dynamic tuning, a simpler/lighter transmission, and improved maintainability. Reference 3 describes the analysis and optimization of this structure.

The fuselage, shown in Figure 7, is a hybrid metallic/composite structure provided by one of our risk-sharing partners in the program, Hawker de Havilland (HdH), Australia. The major metallic parts are the roof, main frames, fittings, and forward cockpit structure. Graphite composite with a modern, toughened resin system is utilized in the skins, tub/keel beam assembly, and aft fuselage assembly. Figure 8 shows the first fuselage shortly after it arrived at MDHC in Mesa. Experience gained in fabricating the first three development fuselages led HdH to refine the design to save weight. The resulting production fuselage design weighs approximately 10% less than the development fuselages.

MDHC produces the tailboom and empennage, which are all-composite primary structures using the same graphite/toughened resin as the fuselage. Metallic frames and fittings are used at the fuselage and empennage joints. The NOTAR® tailboom represents a particular challenge to structural designers as it must present an aerodynamic surface both inside and outside and is slotted lengthwise. As with the fuselage, the first tailboom design was redesigned for production to save weight and improve producibility. The production tailboom is illustrated in Figure 9; about a 25% weight saving was achieved by this design. Development of the tailboom is described in Reference 4.

To prove the adequacy of the airframe structure, a series of static tests, are being conducted. Individual component development tests, a fuselage/tailboom joint test, and material qualification tests have been completed. Two full airframe static tests are being performed. The airframe is suspended in a large steel framework and loaded to the appropriate test condition via "wiffle trees" and hydraulic rams controlled by a computer system, as shown in Figure 10. Testing of Static Test Article number 1 (STA-1) using the third development fuselage has been successfully completed. Testing of STA-2 using the third production fuselage will be completed in the fall of 1993.

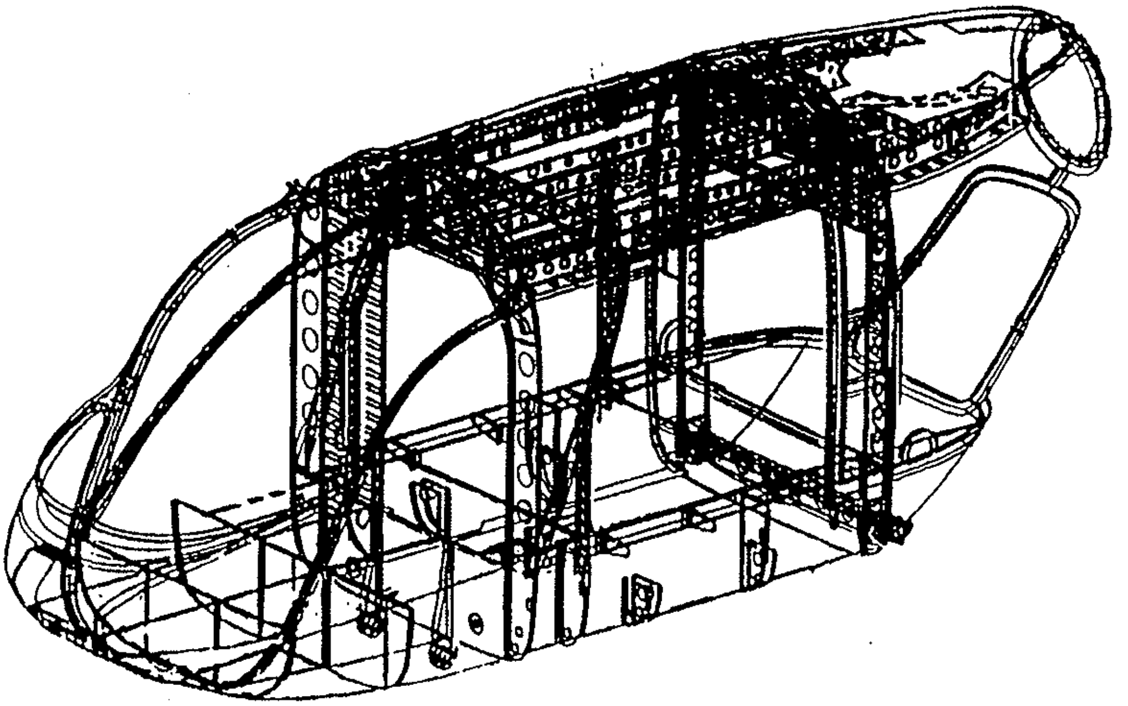

Figure 7. MD Explorer Fuselage Structure

Figure 8. First MD Explorer Fuselage Delivered to MDHC, Mesa

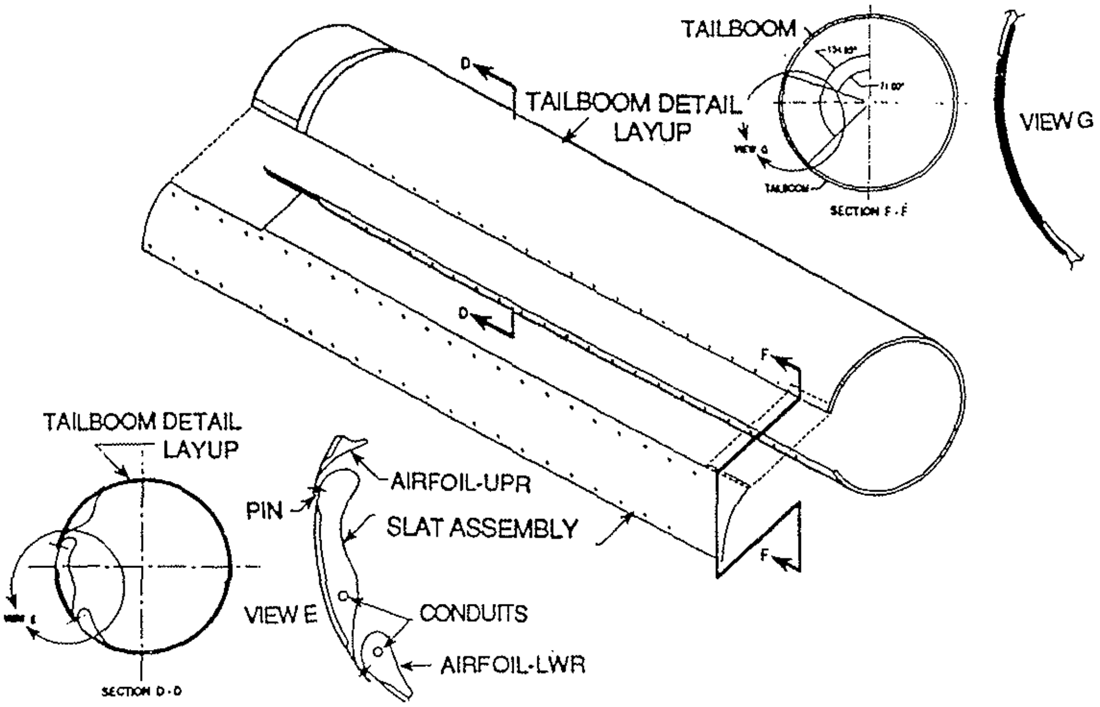

Figure 9.   MD Explorer Tailboom

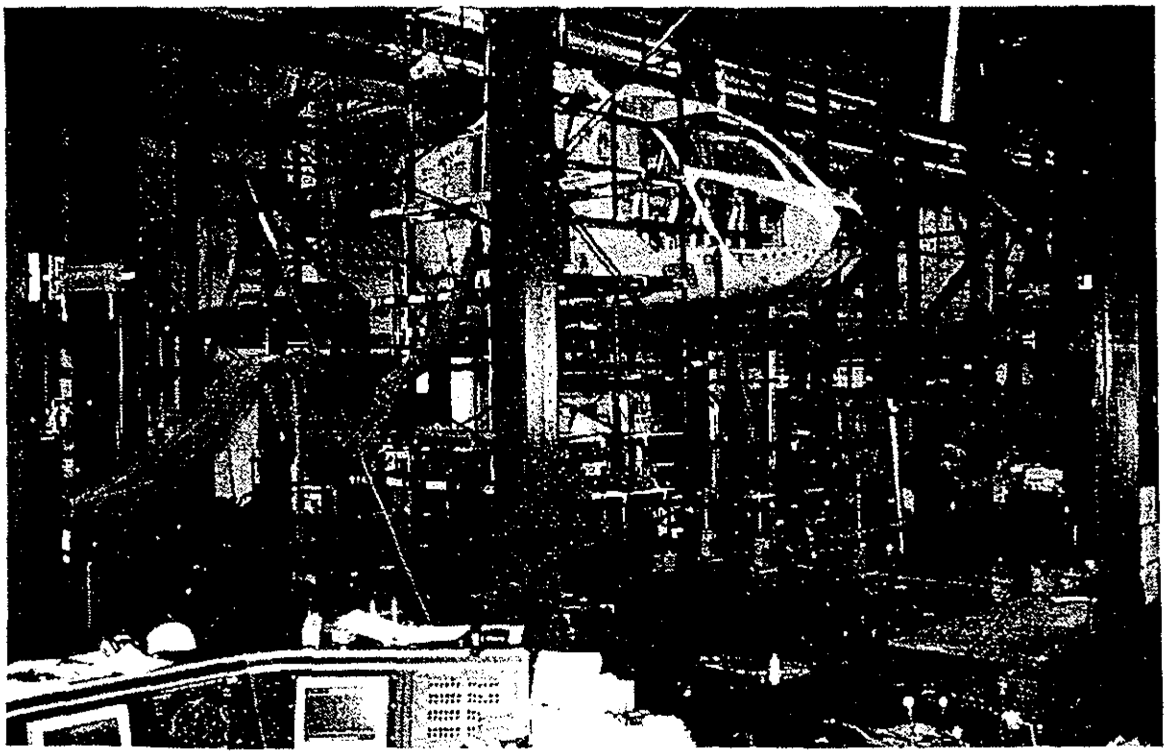

Figure 10.   Airframe Static Test

Rotor

The MD Explorer rotor represents the third generation of bearingless, hingeless rotors at MDHC. We believe it will be the first rotor of this type to be certificated and committed to production anywhere in the world. Figure 11 shows the general arrangement of the hub, flexbeam, pitchcase, and blade. The hub and damper caps are aluminium, the flexbeam and blade are fiberglass composite, and the pitchcase is graphite composite. As in the airframe, modern toughened resin systems are utilized for the composite parts.

Success of a bearingless flexbeam rotor is directly related to controlling the stresses imposed on the flexbeam through careful design and extensive development testing. Design and optimization of this key component are described in Reference 5. Other rotor design parameters were chosen to match the needs of the customer and the latest civil air regulations; in particular tip speed and tip shape were designed to complement the low acoustic signature provided by the NOTAR® anti-torque system.

The first rotor was completed in late 1991 and tested on the whirl stand at MDHC in Mesa, Figure 12. The test rig and rotor were found to have adequate structural damping for aeroelastic stability. Measured hover power, thrust, and lower mode frequencies agreed well with predictions. Greater detail is available in Reference 6.

Immediately following the successful whirl stand test, the rotor and stand were moved to Moffet Field, California, and installed in the NASA Ames 40x80-foot full-scale wind tunnel. The test obtained a wealth of data to support analytical correlation of bearingless rotor computer models, showed the rotor was aeroelastically stable over the entire flight envelope tested, and reached sustained test conditions over 200 knots airspeed and 1.7g simulated load factor. Figure 13 shows the rotor and test rig installed in the wind tunnel. Reference 7 describes the test and Reference 8 describes aeroelastic results and correlation with dynamic analyses.

Fatigue characteristics of the rotor hub are currently undergoing qualification testing in a sophisticated test fixture, Figure 14. A complete hub assembly with flexbeams and pitchcases is suspended by 36 hydraulic cylinders. Under the control of the computer system in the foreground of Figure 14, complete flight spectrum fatigue loads and motions are applied to the hub assembly. Hub fatigue testing is proceeding concurrently with flight test. Hours on the test part lead those on the flight vehicle by sufficient margin to assure flight safety.

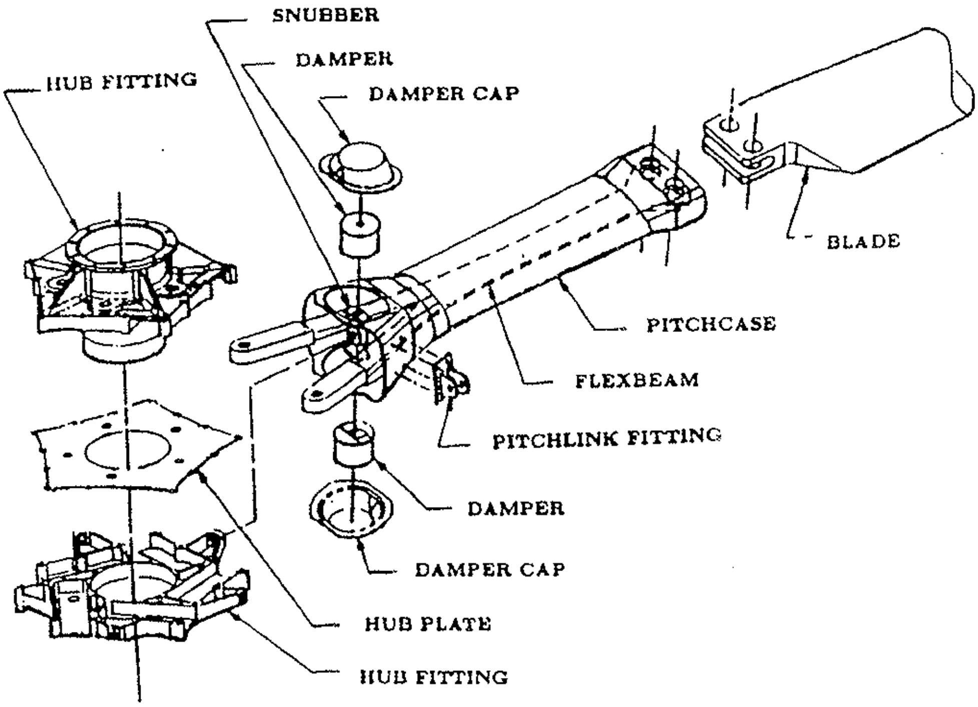

Figure 11. MD Explorer Rotor

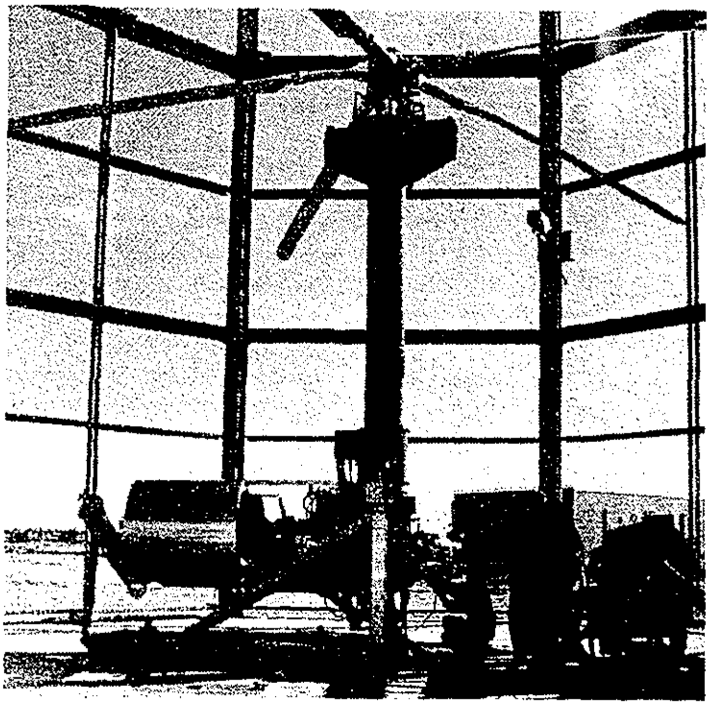

Figure 12. MD Explorer Rotor on Mesa Whirl Stand

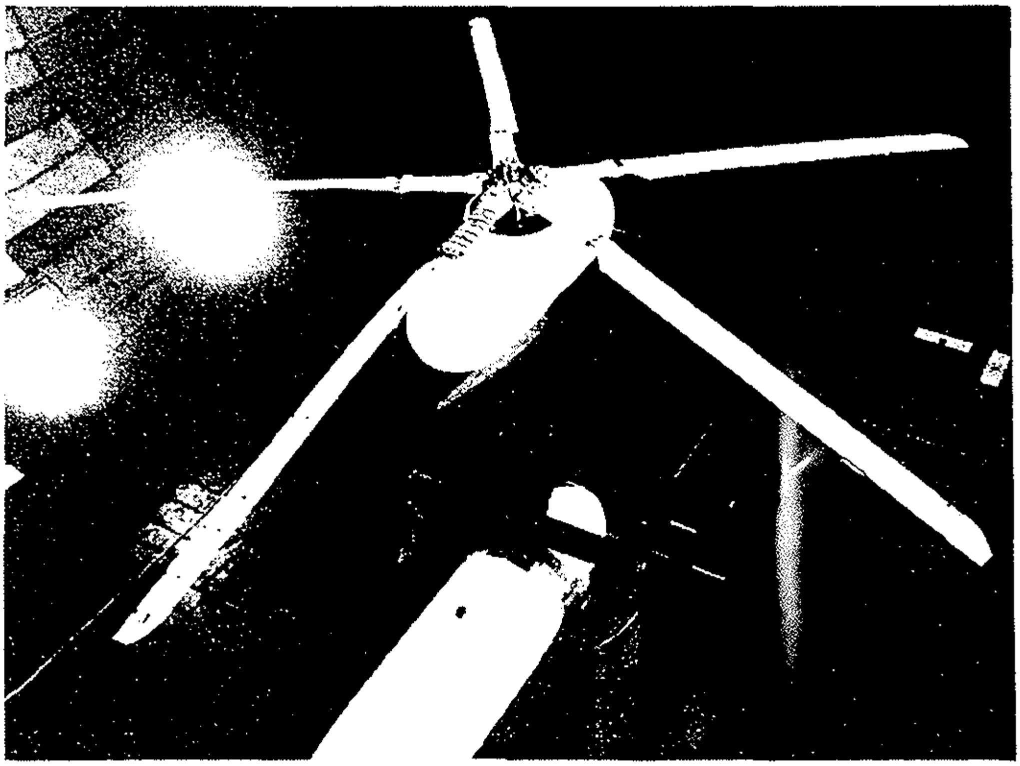

Figure 13. Rotor in NASA Ames 40x80 Wind Tunnel

Figure 14. Rotor Hub Assembly Fatigue Test

NOTAR®

At the time the original MDX customer surveys were made (1987), the NOTAR® System had been successfully demonstrated but had yet to be offered as a commercial product. In spite of this lack of familiarity, the operators surveyed clearly preferred NOTAR® over all other anti-torque systems for its safety and acoustic advantages. Since that time, the MD 520N has been certificated with NOTAR® and the 520N fleet has accumulated more than 15,000 flight hours without any NOTAR® mechanical problems. Reference 9 has shown that a NOTAR®-equipped MD 530 and a tail-rotor-equipped MD 530 require the same power to hover. The decision was clear; the MD Explorer would be designed with NOTAR®.

The heart of the NOTAR® System is the variable pitch fan. Figure 15 shows the full-scale ground test rig developed to define the aerodynamic performance of the MD Explorer fan. As can be seen in the figure, the electrically powered rig simulated the entire fan installation including a complete aircraft inlet and tailboom. Screens of various densities were utilized at the rear of the tailboom to simulate the flow restriction of the thruster assembly. Using data from this rig, a fan with an improved blade and stator configuration was defined, test parts were produced, and the desired performance was demonstrated.

Incorporation of the improved performance fan in the MD Explorer afforded the opportunity to incorporate "lessons learned" from the MD 520N fan design, as described in References 10 and 11. In particular, the fan blades became an injection-molded, fiberglass-filled, polypropylene design similar to the MD 520N blade shown in Figure 16. These blades have the advantage of low production cost and have demonstrated excellent erosion resistance in the field. Similar benefits are expected for the MD Explorer fan.

In a similar manner, experience with the MD 520N direct jet thruster design, as described in Reference 12, led to the utilization of the same two-dimensional aerodynamic concept on the MD Explorer. Figure 17 shows the MD Explorer thruster, which is approximately 30% larger than the MD 520N thruster.

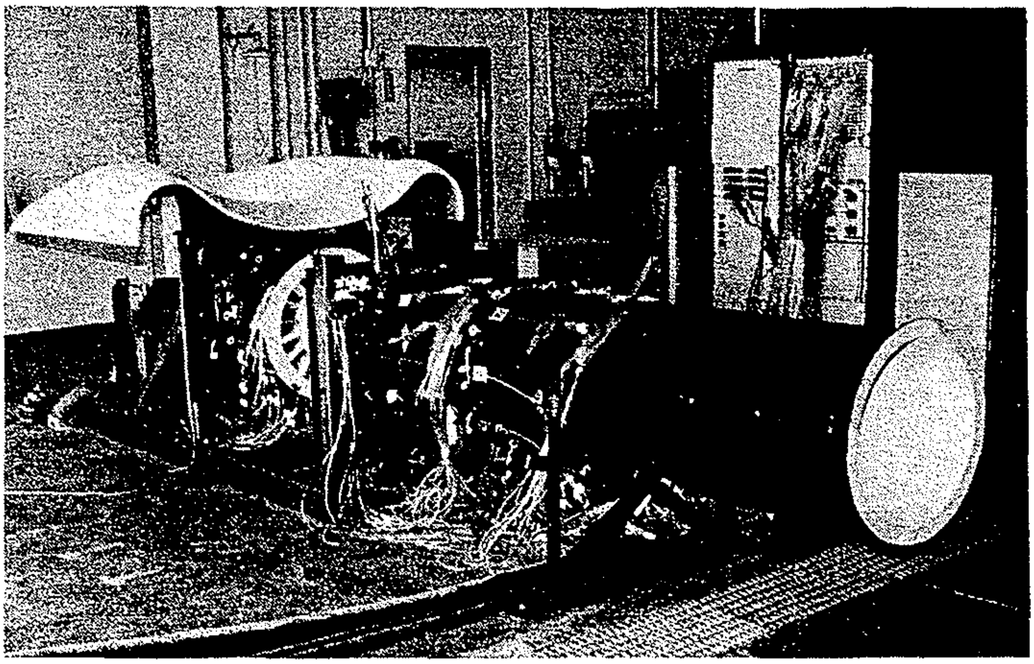

Figure 15. Fan Test Rig

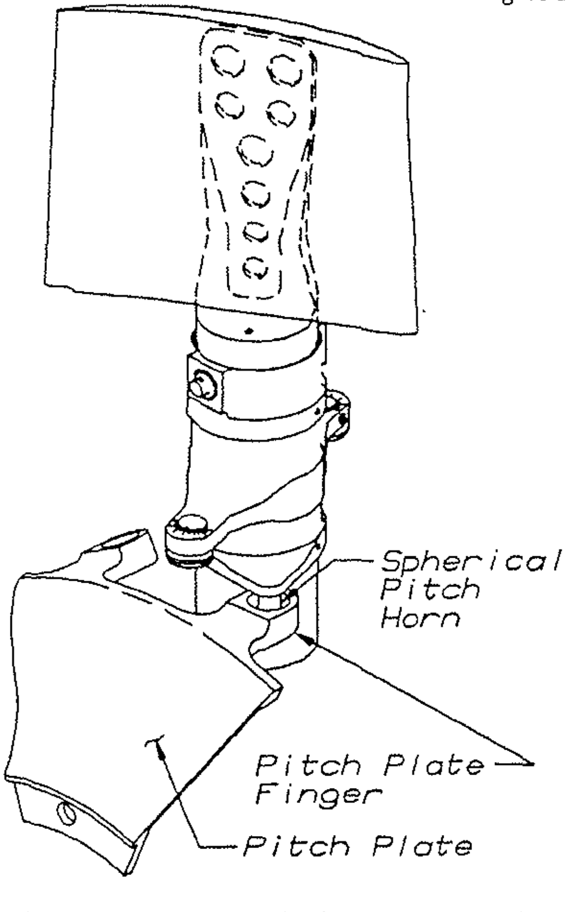

Figure 16. MD 520N Injection-Molded Fan Blade

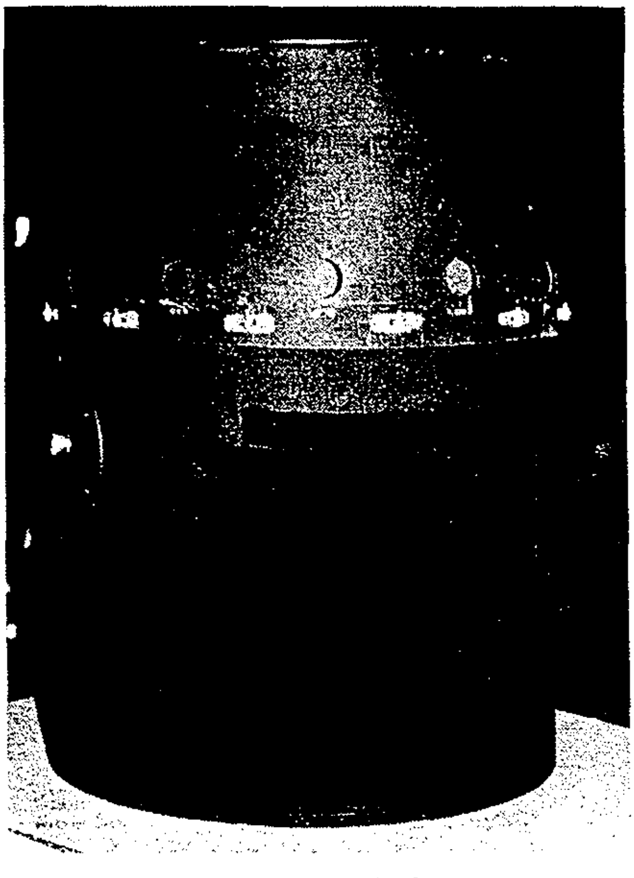

Figure 17. MD Explorer Thruster

Ground Test Vehicle

Functional integration of the propulsion, rotor, and NOTAR® systems is a task most easily accomplished with a complete aircraft operating in controlled conditions. To this end, it was decided to dedicate the first completed MD Explorer to these tasks as a ground test vehicle (GTV), Figure 18. The GTV airframe is mounted in a walled pit (for safety) at the northwest corner of the MDHC flight ramp in Mesa.

Prior to first flight using the second MD Explorer, the GTV proved invaluable for development and checkout of engine control software for the electronic control units (ECUs) of the Pratt and Whitney Canada 206A turboshaft engines. It also provided a vehicle to optimize the NOTAR® fan/thruster rigging, verified rotor/airframe aeroelastic stability, verified rotor/NOTAR® control power, and confirmed proper operation of the flight control system. This development testing reduced the risk attendant on making the subsequent first flight.

Beginning in the fall of 1993, the GTV will perform the 100-hour qualification test on the drive system and controls required by the Federal Aviation Administration (FAA) for the MD Explorer type certificate.

Flight Test

With the preceding efforts complete, the second MD Explorer was prepared for flight. The first flight was successfully conducted on December 18, 1992. Subsequent low-speed testing achieved airspeeds of 40 knots forward and 20 knots sideward/rearward and cleared the aircraft for "over the fence" flying, which was first accomplished in April 1993, as illustrated in Figure 19.

Since April, the flight test program has progressed rapidly, reaching airspeeds to 173 knots, load factors to 2.8g, and altitudes to 20,000 feet. The vehicle has also demonstrated single-engine operation and full autorotations. Figure 20 shows the level of performance expected for the production aircraft, based on the data gathered to date.

Figure 21 shows the velocity and load factor test points attained and Figure 22 shows demonstrated sideslip points. Once flight envelope expansion is complete, the current test vehicle will conduct the flight strain survey to qualify the structure for FAA certification. In the near future, it will be joined by the second vehicle, which will do the testing required to flight-qualify performance and handling qualities. Two additional vehicles will be used to qualify options and avionics.

Figure 18. MD Explorer Ground Test Vehicle Flight Test

Figure 19. MD Explorer Flight Test

Payload:	
- Internal	1,600 pounds
- External	3,000 pounds
Range:	340 nautical miles
Cruise Speed:	
- Sea Level ISA	145 knots
- Sea Level 100 °F	146 knots
Hover Out of Ground Effect:	
- ISA	11,100 feet
Hover In Ground Effect, One Engine Inoperative:	
- Gross Weight	5,750 pounds

Figure 20. Current MD Explorer Performance

Conclusion

Development and test of the MD Explorer has progressed to the point where the vehicle is confirming it possesses the characteristics required by helicopter operators to operate safely and profitably.

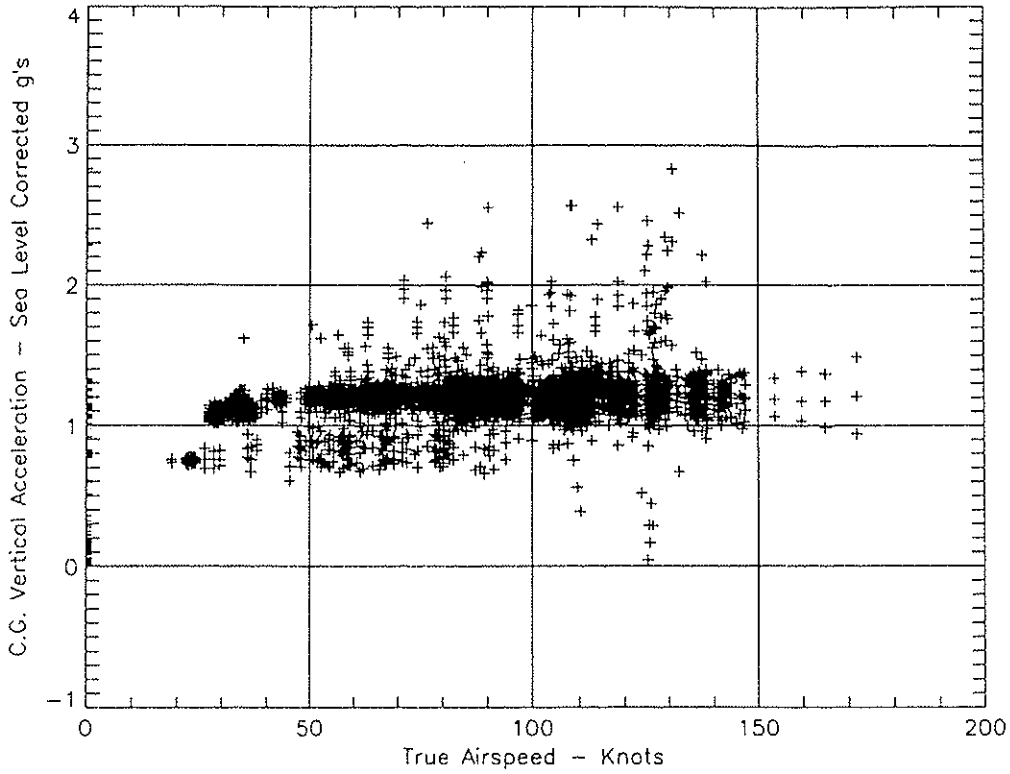

Figure 21. Airspeeds and Load Factors Attained Through June 1993

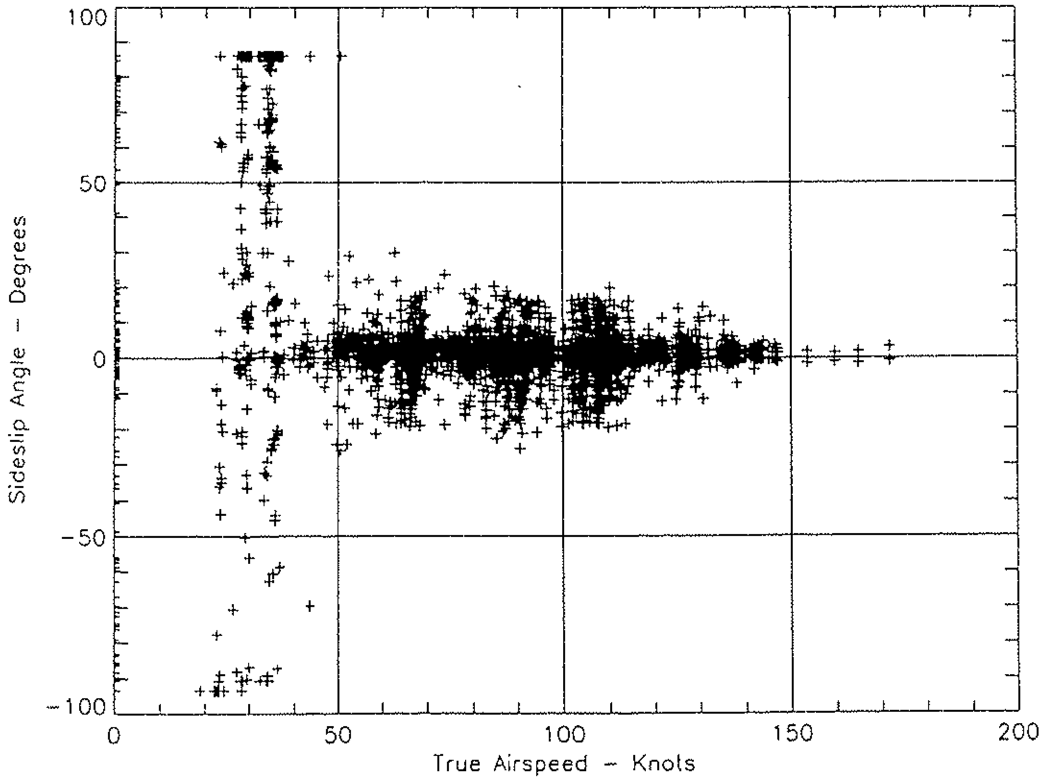

Figure 22. Airspeeds and Sideslip Angles Attained Through June 1993

References

1. Head, R., and Hughes, C., "McDonnell Douglas' New Light Twin Helicopter: MD Explorer," presented at the 48th Annual Forum of the American Helicopter Society, June 1992.

2. Alldridge, P., and Kahler, V., AIAA 93-1042, "MD Explorer – Customer Focus Combines Advanced Design Methods," AIAA/AHS/ASEE Aerospace Design Conference, February 1993.

3. Morton, M., and Kaizoji, A., "Effects on Load Distribution in a Helicopter Rotor Support Structure Associated with Various Boundary Configurations," presented at the 48th Annual Forum of the American Helicopter Society, June 1992.

4. Jouin, P., Kulesha, R., and Schindler, G., "Fabrication of the NOTAR® Tailboom for the MD Explorer," presented at the 49th Annual Forum of the American Helicopter Society, May 1993.

5. Hamilton, B., et al, "Advanced Composite Main Rotor Flexbeam from Optimization to Full Scale Multicomponent and Whirl Tower Testing," presented at the 49th Annual Forum of the American Helicopter Society, May 1993.

6. Murrill, R., et al, "Bearingless Main Rotor Whirl Test: Design, Analysis and Test Results," presented at the 49th Annual Forum of the American Helicopter Society, May 1993.

7. McNulty, M., Jacklin, S., and Lau, B., "A Full Scale Test of the McDonnell Douglas Advanced Bearingless Rotor in the NASA Ames 40-by-80 Foot Wind Tunnel," presented at the 49th Annual Forum of the American Helicopter Society, May 1993.

8. Nguyen, K., et al, "Aeroelastic Stability of the McDonnell Douglas Advanced Bearingless Rotor," presented at the 49th Annual Forum of the American Helicopter Society, May 1993.

9. Bregger, R., and Dawson, S., "Side-by-Side Hover Performance Comparison of MDHC 500 NOTAR® and Tail Rotor Anti-Torque Systems," presented at the 48th Annual Forum of the American Helicopter Society, June 1992.

10. Nyhus, D., and Rao, C., "Design of the Variable Pitch Fan for the McDonnell Douglas MD 520N Helicopter Equipped with the NOTAR® System," presented at the 48th Annual Forum of the American Helicopter Society, June 1992.

11. Chen, S., and Patel, R., "Injection Molded NOTAR® Fan Blade for Helicopter Dynamic Application," presented at the 48th Annual Forum of the American Helicopter Society, June 1993.

12. Pyle, G., and Rao, C., "Maximizing the Utilization of Computer-Aided Technology for Fabrication of Composite Structures," presented at the 48th Annual Forum of the American Helicopter Society, June 1992.