PAPER Nr. : 71

DEVELOPMENT OF THERMOPLASTIC PARTS FOR AEROSPATIALE HELICOPTERS

BY
A.TURCHETTI
G.CURCIO
J.SAPORITO

AEROSPATIALE HELICOPTER DIVISION
MARIGNANE, FRANCE

FIFTEENTH EUROPEAN ROTORCRAFT FORUM
SEPTEMBER 12 - 15, 1989 AMSTERDAM

ABSTRACT

The authors first review current applications of thermoplastic parts in Aérospatiale helicopters, covering injection-molded parts, thermoformed parts and assemblies. Development work on materials, procedures and inspection methods is then examined, with an assessment of its effects on cost reduction, manufacturing cycles and component weights. Three examples are covered in detail:

- a Dauphin main landing gear wheel rim made of injection or compression-molded PEEK and short carbon fibers,
- a high precision injection-molded PEEK/short carbon fiber fan rotor,
- a two-piece Dauphin upper tail fin, with a PEEK/carbon fiber central section and Kevlar/polyamide sandwich tip fairing with a Nomex honeycomb core.

CONTENTS

1 - INTRODUCTION

Thermoplastics have been used on helicopters to date only for secondary structural components and equipment items. The principal materials used are PA, PC, PMMA and ABS resins, with or without short glass fiber reinforcement.

The development of new high performance materials using carbon fibers now makes it possible to consider more sophisticated applications.

The properties of these new materials are suitable both for component design and for manufacturing purposes. Important features include improved behavior after aging and exposure to high temperatures, impact strength, extended shelf lives for semifinished products without requiring special storage conditions, shorter manufacturing cycles using suitable production equipment, and potential for repair by reheating the matrix material.

2 - PRESENT STATUS

2.1 - Materials

Some 900 different parts made of various thermoplastic materials are currently used on Aérospatiale helicopters:

- 5% are manufactured from POLYMETHYLMETHACRYLATE (PMMA) for transparent panels
- 60% are made of POLYAMIDE 6, 6.6, 11, 12 (PA): injection-molded glass or carbon fiber reinforced parts or pure PA spin-molded parts
- 20% are made of POLYOXYMETHYLENE (POM) or polyacetal: injection-molded parts
- 10% are made of POLYCARBONATES (PC): Injection-molded pure PC components or thermoformed glass fiber reinforced panels
- The remaining 5% are made of the following materials:
    - POLYPHENYLENE SULFONE (PPS): injection-molded carbon fiber reinforced parts
    - POLYETHER SULFONE (PES): injection-molded carbon fiber reinforced parts
    - ACRYLONITRILE-BUTADIENE-STYRENE (ABS): thermoformed panels
    - POLYETHYLENE TEREPHTHALATE (PETP): injection molded parts.

2.2 - Types of Parts

About 900 part numbers refer to injection-molded thermoplastics, including:

- oil cooler fan stators and rotors
- small fluid reservoirs
- tail rotor head hinge bushings (Dauphin, Gazelle)
- Pitot heads
- handles and handgrips
- floor panel inserts
- ventilation outlets
- flight control cable pulleys, etc.

Examples are shown in Figure 1.

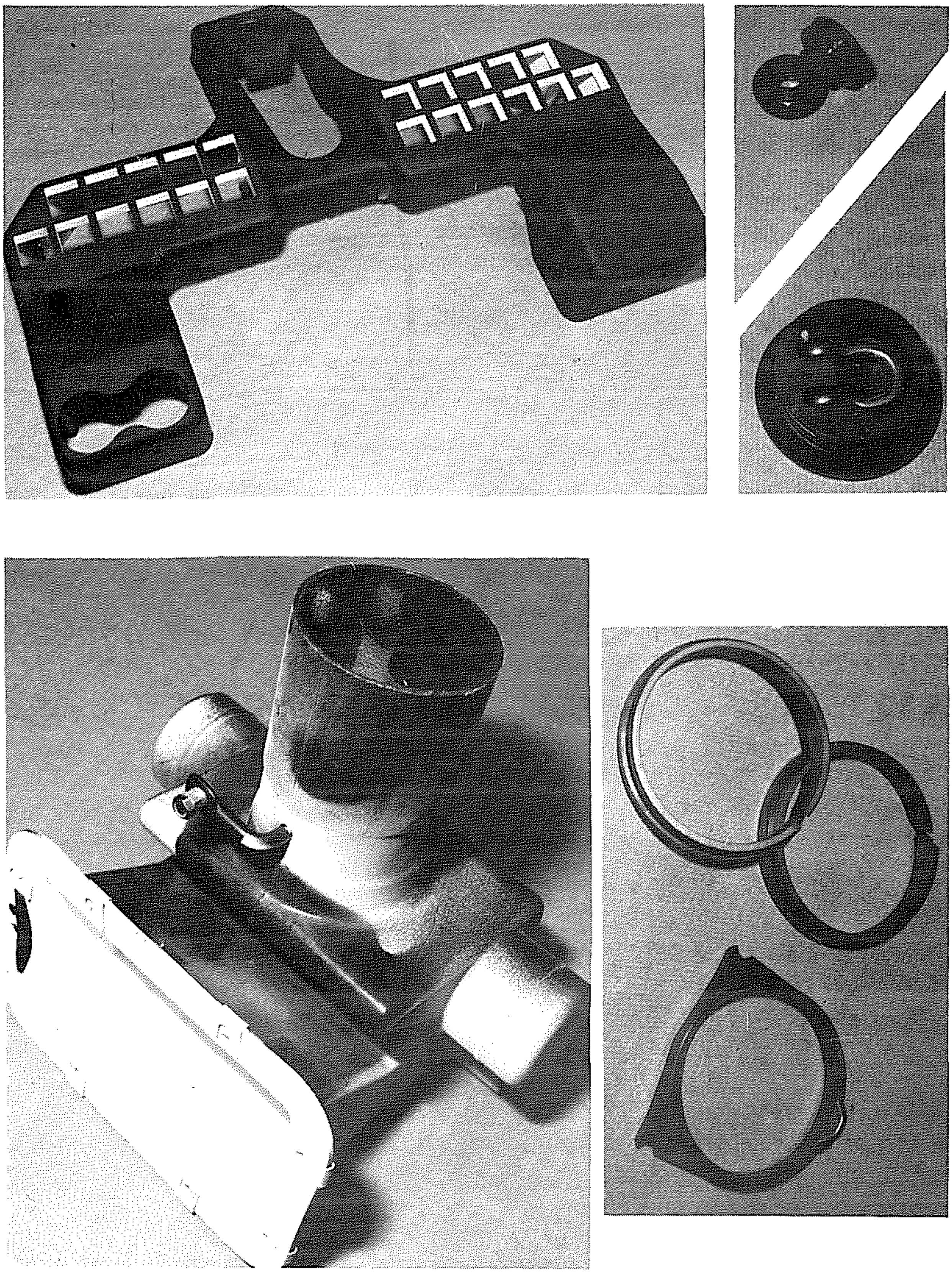

Figure 1 – Typical injection-molded parts

Other parts are manufactured by thermoforming:

- transparent canopy panels (PMMA)
- interior lining panels (ABS)
- canopy structures (POLYCARBONATES with 30% short glass fiber reinforcement).

The thermoformed canopy components (Figure 2) are "welded" together by inserting a metal screen between the mating surfaces: the wires are heated by supplying them with an electric current, while an inflatable seal is used to apply pressure on the assembly (Figure 3).

Figure 2 – Assembled TwinStar canopy

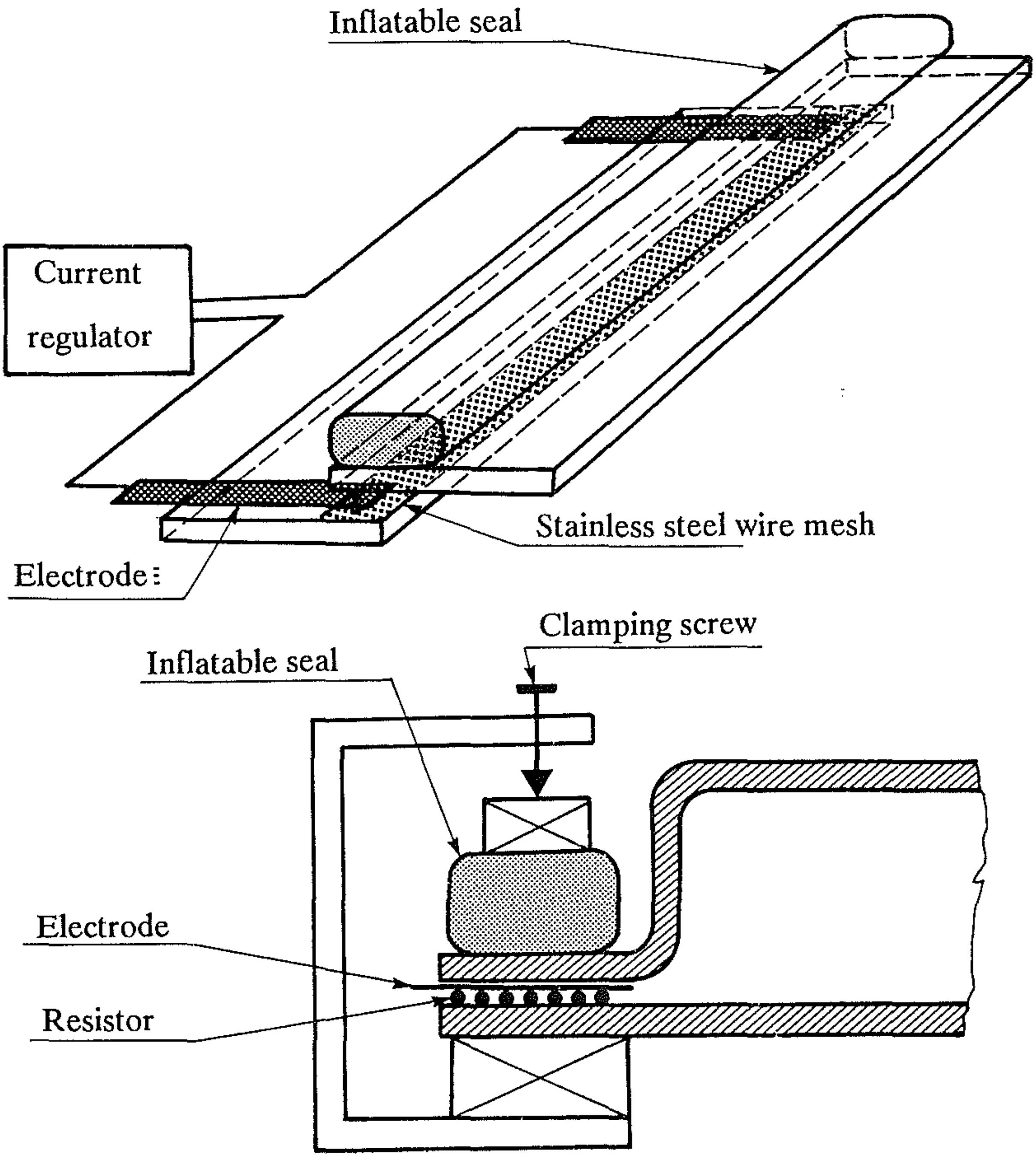

Figure 3 – Resistance welding method

2.3 - Advantages and Limitations

ADVANTAGES

- Injection-molded thermoplastic parts replacing metal items account for about 90% of all applications, allowing weight gains of 20–50% and cutting production costs by 10-60%.
- Thermoplastic panels are easily implemented by thermoforming and can be assembled by resistance welding, resulting in a 10–30% drop in manufacturing cycles and 10-20% lower production costs.

LIMITATIONS

- Mechanical properties are limited, but acceptable for parts submitted to low stress loading.
- Parts are subject to creep (stress + temperature + time).

3 - CURRENT DEVELOPMENTS

3.1 - New Materials

3.1.1 - SHORT-FIBER COMPOSITES

The principal matrices are:

- POLYETHERETHERKETONE (PEEK)

  Good temperature resistance (Tg point: 143°C); unaffected by damp aging, oil, grease, solvents; very good mechanical properties (static and fatigue); flame and fire-resistant; melting point: 350°C.

- POLYETHERKETONE (PEK)

  Tg point: 165°C; melting point: 380°C; harder material.

- POLYETHERIMIDE (PEI-ULTEM)

  Tg point: 200°C; poor solvent resistance, average oil and grease resistance; slight moisture sensitivity; lower cost; lower mechanical properties.

- POLYAMIDE IMIDE (PAI-TORLON)

  Tg point: 275°C; moisture sensitivity; more difficult to manufacture; more expensive.

- LIQUID CRYSTAL POLYMERS (LCP)

  Tg point: 120–140°C; melting point: 280–380°C; low viscosity; very good mechanical properties.

3.1.2 - LONG-FIBER COMPOSITES

- Hot melt or solvent phase impregnated fabrics and multi-ply layups
  - Matrix: PEEK, PEI, PPS, PES, PAI, etc.
  - Appearance: rigid, undeformable

- Hybrid yarn fabrics (mixed or double layer with reinforcing filaments and thermoplastic filaments)
  - Matrix: PEEK, PEI, PPS, PA.
  - Appearance: flexible and deformable

- "FIT" process fabrics: reinforcing filaments + thermoplastic powder coated with matrix
  - Matrix: PEEK, PEI, PPS, PA, etc.
  - Appearance: relatively flexible and deformable

3.1.3 - POTENTIAL ADVANTAGES

The thermoplastic composites now being developed, notably carbon-reinforced PEEK from ICI, have a number of potential advantages over conventional thermosetting composites. These include better resistance to environmental damage, damp aging, temperature resistance, higher impact and fatigue strength. However, their physicochemical properties as related to manufacturing processes are quite different:

- preimpregnated semifinished products are relatively rigid and tack-free.
- laminated structures are formed by melting the resin without chemical reactions but at relatively high temperatures (300–400°C).
- the material is allowed to solidify under controlled cooling conditions.
- the solid and viscous states are reversible.

3.2 - Applications

3.2.1 - INTERIOR LINING

A semifinished product marketed in the form of PEI sandwich panels (PEI foam + PEI fabric) is now being assessed for use in preparing interior lining panels. The principal advantages of this material (AIRSAN, supplied by Schreiner Composites) are its low density, adequate mechanical properties for this type of application, fire resistance with minimum smoke emission, and the claimed possibility of thermoforming panels in a variety of shapes in a single operation.

The evaluation now in progress covers its physical properties and the methods and equipment required for implementation.

3.2.2 - DAUPHIN WHEEL RIM

A recent research and development program comparing several technologies for landing gear wheel rims included thermoplastic versions using carbon fiber reinforced PEEK. The thermoplastic rims comprise two interlocked and bolted ribbed half-flanges 190 mm in diameter (Figure 4). Two manufacturing techniques were used:

- injection molding of VICTREX 450 CA 30 (PEEK + 30% short carbon fibers, manufactured by ICI): the material was injected at 400°C at a pressure of 1200 bars into a 210°C mold.
- compression molding: the mold containing 6 to 8 mm of PEEK/carbon fiber compound was heated to 390°C under a pressure of 375 bars applied by a tooling piston.

The part is removed from the mold after it has cooled below 200°C.

Although lacking the rigidity of production version aluminum castings, the rims show satisfactory static behavior. Both techniques provide a 40% weight reduction and a 70% cost reduction compared with the metal rim.

Application: Technological assessment program which allowed to familiarize with the materials and processes and served as a basis to the development of the Super Puma oil cooling fan.

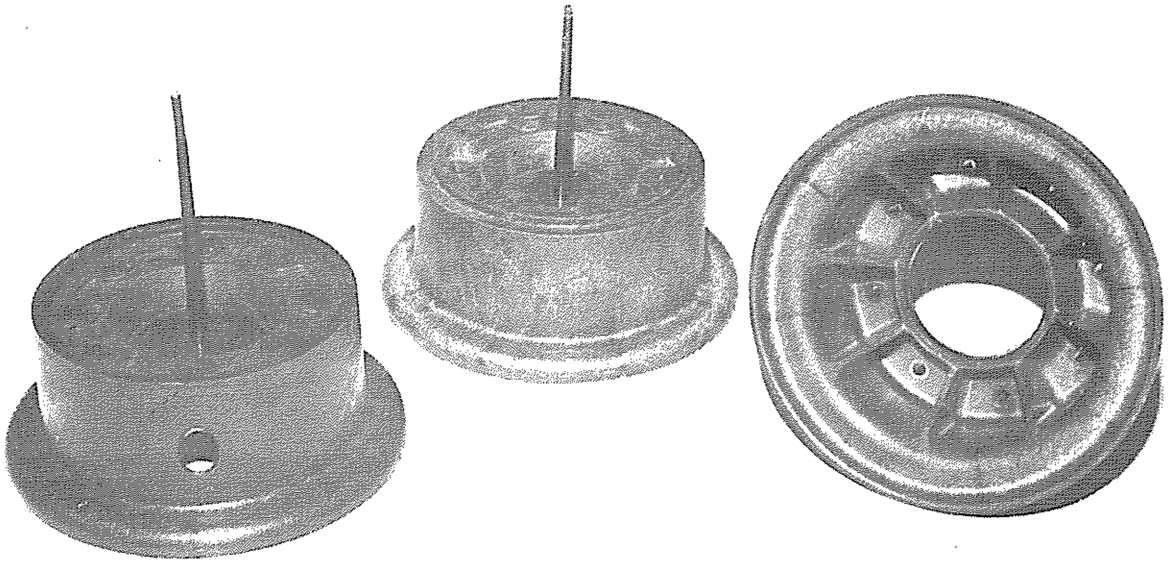

Figure 4 – Carbon fiber reinforced PEEK wheel rim for Dauphin

3.2.3 - SUPER PUMA OIL COOLING FAN

The formerly used 50% glass fiber reinforced polyamide material was replaced by 30% carbon fiber reinforced PEEK (VICTREX 450 CA 30) to meet environmental requirements and improve on the operating limits of polyamide.

The Super Puma main gearbox oil cooling fan rotor is a two-piece bonded and bolted assembly: the 300 mm diameter rotor includes 9 vanes, and is mounted on a flange injection-molded around a metal bearing. The injection cycles require 2½ minutes for the rotor and 4 minutes for the flange.

Production costs are higher for carbon/PEEK fans than for glass/PA fans, but the supplement is largely offset by their longer service life.

Application: This type of fan has been installed on the Super Puma since the end of 1987 and has proved fully satisfactory in service.

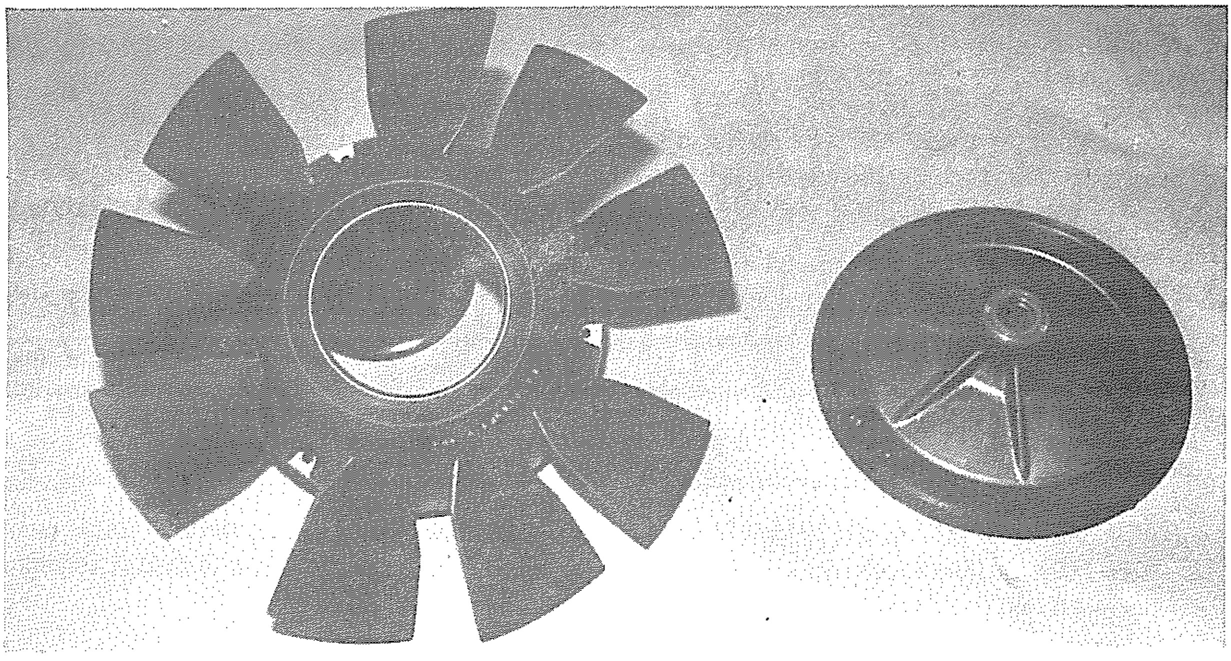

Figure 5 – Carbon fiber reinforced PEEK cooling fan for Super Puma

3.2.4 - DAUPHIN UPPER TAIL FIN

The development of new long-fiber materials will depend on a better assessment of manufacturing and inspection procedures, equipment and specific investment requirements, and their effects on component design.

Acquiring this expertise was the principal justification for using thermoplastic composites to manufacture a tail fin for the SA 365N1 Dauphin. Two major reasons dictated the choice of the component:

- the thermoplastic material could easily be compared with the thermosetting material used for the production Dauphin tail fin;
- as an airfoil, the fin constitutes a point of convergence among requirements of helicopters, airplanes and missiles.

The project was carried out as a joint research program by the different Aérospatiale Divisions.

Design and Material Selection

The design of the thermoplastic tail fin includes both monolithic and sandwich construction using a wide range of manufacturing processes and types of assembly. It includes 5 thermoplastic components assembled by a welding process specific to thermoplastic construction:

- the leading edge section: monolithic APC2
- the pressure face and suction face skin panels: sandwich structure comprising APC2 outer skin, Nomex honeycomb core and PA/Kevlar FIT fabric inner skin
- two spars: monolithic APC2.

The fin was assembled with conventional bonded, riveted and bolted parts:

- upper rib: aluminum alloy
- lower rib: carbon fiber/epoxy resin composite
- tail rotor duct mounting fittings to ensure interchangeability.

Applications

THERMOPLASTIC COMPONENTS

- Leading Edge Section

This component was autoclave-molded with an internal fixture and an outer cooling jig to provide a satisfactory surface finish.

- Pressure and Suction Face Skin Panels

These sandwich elements were produced in a two-step vacuum bag process: first the outer skin was prepared at low relative pressure, then a Nomex honeycomb core was bonded to the outer skin. The resulting surface finish was acceptable despite the low relative pressure applied.

- Forward Spar

This channel-shaped component was manufactured using a metal mold for the exterior shape, and an internal heat-resistant elastomeric countermold. The resulting surface finish and internal soundness were excellent.

- Aft Spar

This element has the same shape as the forward spar, and was autoclave-molded with a recessed metal die; once again, the soundness of the composite material was excellent.

THERMOPLASTIC COMPONENT ASSEMBLIES

The thermoplastic components were assembled with conventional parts by resistance welding. Eleven weld seams about 1 meter long were executed successively in the experimental procedure, although all the welding could be performed in a single operation with production equipment. Satisfactory weld adhesion was obtained.

Ongoing Work

The problems encountered in developing the molding and assembly tools and procedures have now been solved. A complete tail fin will be produced and submitted to laboratory tests in order to assess its potential strength before flight testing. More thorough comparative tests will then be carried out with the production version to evaluate environmental damage resistance.

A thermoplastic tail fin tip fairing will also be manufactured to form a complete assembly using new materials.

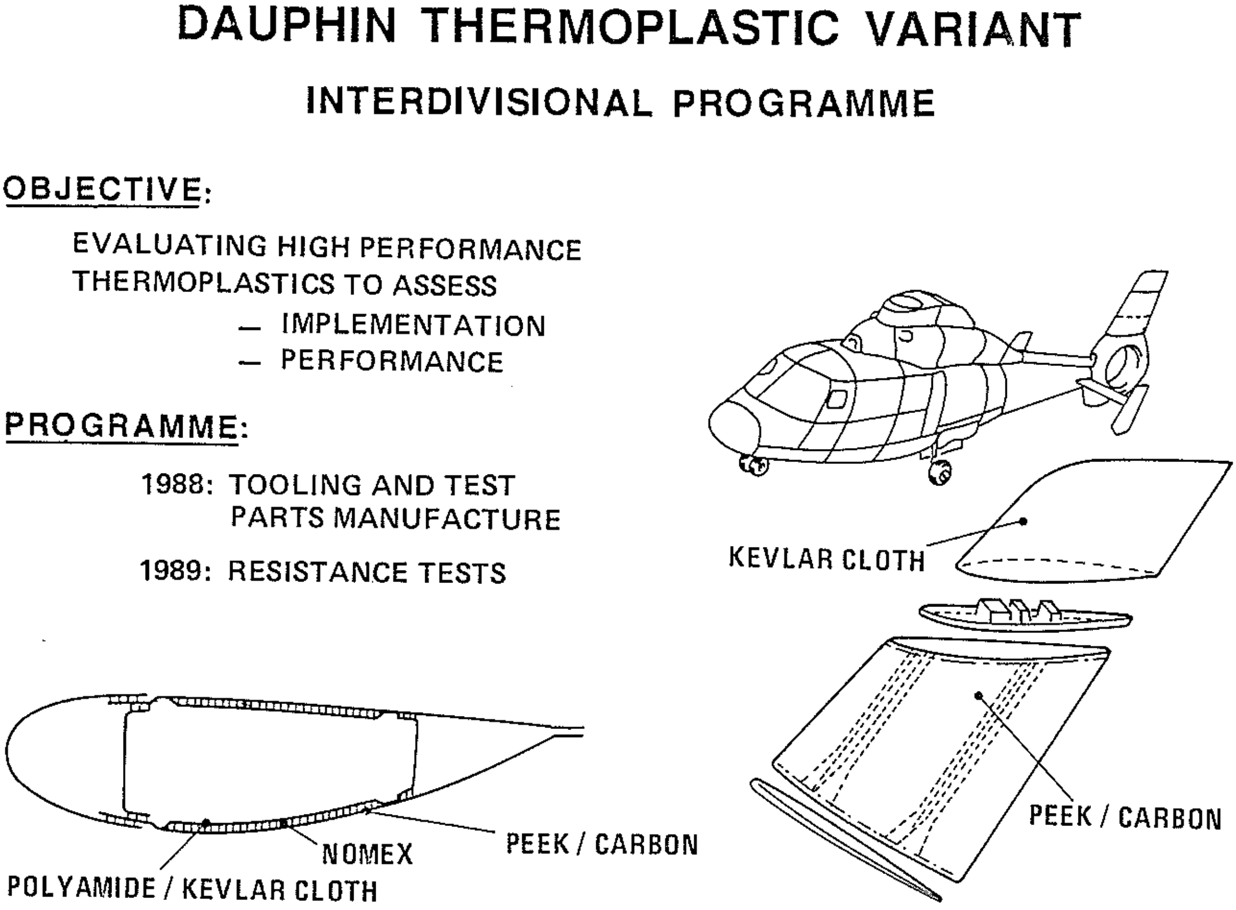

DAUPHIN THERMOPLASTIC VARIANT

INTERDIVISIONAL PROGRAMME

OBJECTIVE:

EVALUATING HIGH PERFORMANCE
THERMOPLASTICS TO ASSESS
- IMPLEMENTATION
- PERFORMANCE

PROGRAMME:

1988: TOOLING AND TEST PARTS MANUFACTURE

1989: RESISTANCE TESTS

Figure 6 – Thermoplastic tail fin for Dauphin

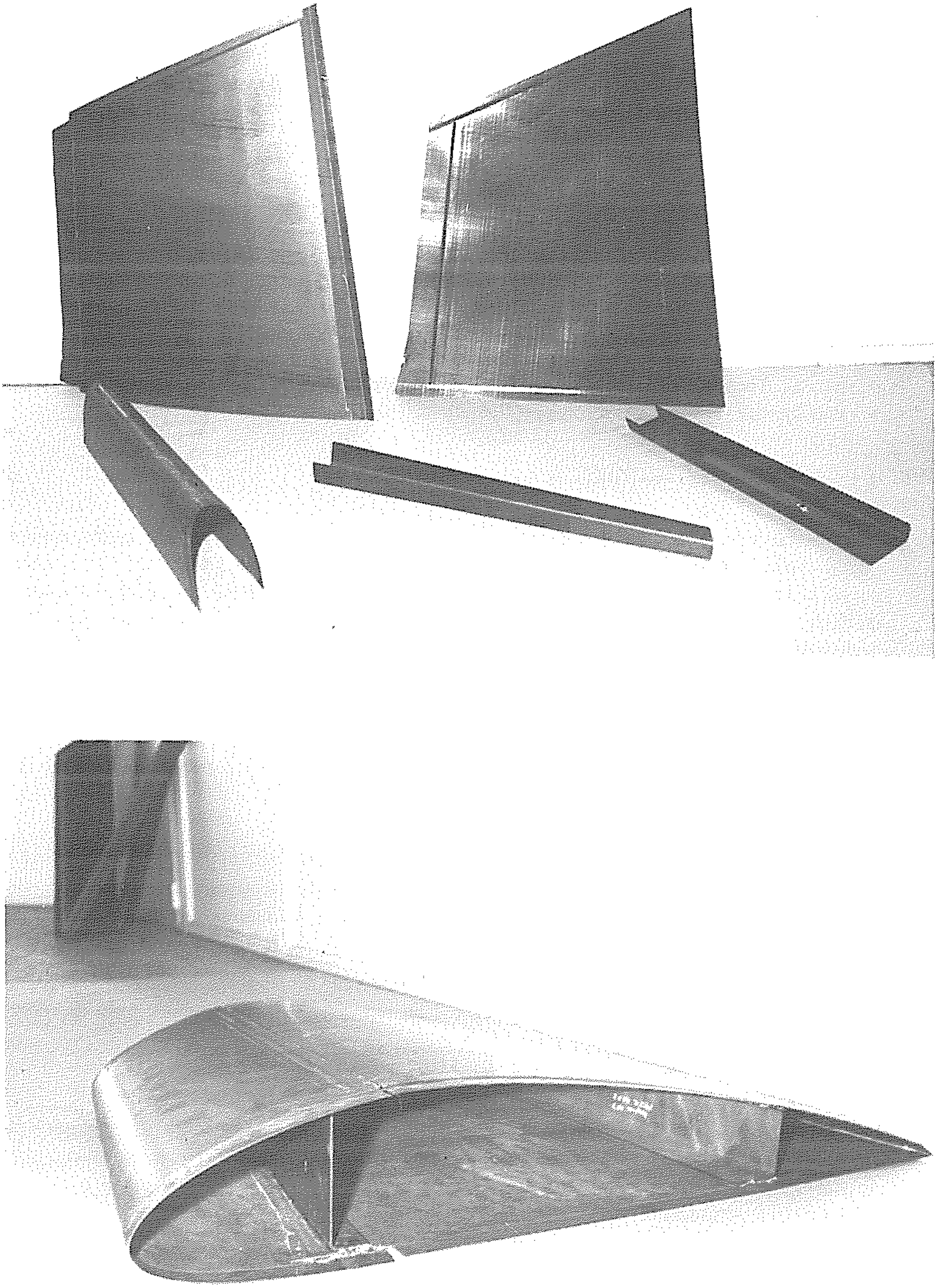

Figure 7 – Thermoplastic tail fin for Dauphin

4 - QUALITY CONTROL

Unlike thermosetting materials, chemical transformations are not required during manufacture of thermoplastic parts. Nevertheless, molding conditions may induce fluctuations in material quality. Three types of inspection are therefore applicable.

4.1 - Material Acceptance Procedures

The physicochemical and mechanical properties of the material are assessed on test specimens. These tests are generally similar to those required for thermosetting materials, but the properties of certain materials may have to be tested under specific environmental conditions (temperature, humidity, solvent exposure, etc.).

The material behavior often depends on the heat treatment applied by the manufacture after production. Thermal analysis methods (DSC, TMA, TGA, DMA) are frequently used in such cases, often in conjunction with various stress loading configurations (bending, compression, creep, etc.).

4.2 - Process Inspection Procedures

Some semicrystalline thermoplastics are sensitive to the heating/cooling cycles applied during manufacturing: these cycles influence the degree of crystallization, and therefore the mechanical and chemical properties of the final product. X-ray diffraction or differential scanning calorimetry (DSC) methods are not sufficiently reliable and are still under development. At the present time it would be preferable to qualify a production cycle and ensure maximum compliance. Unlike thermosetting materials, for which the trend is now toward controlling the curing cycles according to the resin viscosity (which may vary from one batch to the next), automated process control and frozen operating procedures are therefore required.

4.3 - Product Examination Methods

Except for porosity, which is generally very limited by the pressure applied, all the defects observed in thermosetting resin components can also be found in thermoplastic parts, with greater risk of finding defects related to the high temperature and pressure values used, i.e. internal stresses (thermal cracking), dimensional defects (distortion) or incorrect fiber patterns.

Conventional inspection methods are therefore fully applicable, notably X-ray or ultrasonic examination. Additional tests may be conducted on representative test coupons from the edges of the manufactured parts.

5 - CONCLUSION

Unreinforced or short-fiber reinforced thermoplastics are already widely used in helicopters to obtain substantial weight and cost reductions. They will continue to be used for parts subjected to low stress levels in new aircraft programs.

New high-performance resins can now be used to manufacture additional parts submitted to greater loads and to more severe environmental conditions.

Long-fiber reinforced thermoplastic resins are now being evaluated to assess their technical and economic feasibility and to determine suitable types of applications according to their principal features: mechanical properties, environmental resistance and damage tolerance, weight, raw material and production costs, and necessary manufacturing investment costs.

Very encouraging results (composite material quality, surface finish, material properties and assembly characteristics) have been obtained to date, confirming the choice of materials and processes.