EIGHTH EUROPEAN ROTORCRAFT FORUM

THREE-DIMENSIONAL CALCULATIONS OF THE FLOW IN HELICOPTER AIR INTAKES

B. BOIZARD

ONERA, FRANCE

Paper 8.4

August 31 through September 3, 1982

AIX-EN-PROVENCE, FRANCE

ASSOCIATION AERONAUTIQUE ET ASTRONAUTIQUE DE FRANCE

ABSTRACT

In the endeavor to improve helicopters, and in particular to reduce the fuel consumption, the manufacturers are showing an increasing interest in the internal aerodynamics of air intakes.

Until recently, the design of air intakes was mainly empirical, and was determined by a number of constraints unrelated to aerodynamics. Today, a thorough analysis of the internal flow is initiated at the inception of designing. The forms are optimized to improve the internal efficiency and minimize external drag.

To this end, ONERA and the French manufacturers concerned, AEROSPATIALE and TURBOMECA, joined their efforts under the auspices of the official authorities. A computation method was developed by ONERA and applied to the air intakes of two helicopters, ECUREUIL and DAUPHIN.

The computation method is described in the first part of the paper. It is a doublet type flow pattern method for a three-dimensional flow of an ideal, incompressible fluid.

The method is then applied to the ECUREUIL air intake adapted to the ARRIEL engine. Comparisons with experimental results and films made in the ONERA water tunnel are presented.

Finally, the calculations for the DAUPHIN air intake being designed for the new TURBOMECA TM 333 engine are described and the results are compared with those obtained experimentally by the manufacturers. This air intake, very intricate in shape, includes three parts :

- the intake duct
- the engine supply ring
- the bend joining the two above parts.

The results of the calculations concerning the first two parts and the assembled air intake are presented as well as the films of the flow inside the ring, made in the the ONERA water tunnel.

INTRODUCTION

In the endeavor to improve helicopters, and in particular to reduce the fuel consumption, the manufacturers are showing an increasing interest in the internal aerodynamics of air intakes.

Until recently, the design of air intakes was mainly empirical, and was determined by a number of constraints unrelated to aerodynamics. It can even be considered that the stylist and the aerodynamicist had equivalent responsibility for certain small and medium weight helicopters.

This is now past history. A thorough analysis of the internal flow is initiated at the inception of designing on the helicopter. The forms are designed to improve the efficiency of the air intake and minimize external drag.

To this end, ONERA and the French manufacturers concerned, AEROSPATIALE and TURBOMECA, joined their efforts under the auspices of the official authorities. A computation method for internal three-dimensional flows was developed by ONERA and applied to the air intakes of two helicopters. The mesh systems of the air intakes were supplied by the manufacturers. The results are compared with those obtained experimentally by the manufacturers.

The first calculations were made on the existing static air intake of the ECUREUIL fitted with an ARRIEL engine, for the purpose of studying the complex flow which develops therein. Furthermore, a joint effort was made in designing the DAUPHIN air intake for the TM 333 engine developed by TURBOMECA.

This paper describes the computation program used, then gives the initial results obtained on these two air intakes, and compares them to experimental results. Films made in the ONERA water tunnel of the internal flow of the ECUREUIL air intake and the TM 333 supply ring are also presented.

2. DESCRIPTION OF COMPUTATION PROGRAM

The method used to compute internal flow in helicopter intakes is a doublet type flow pattern method, applied to a flow of ideal, incompressible fluid.

The hypothesis of incompressibility seems justified, considering the low velocity encountered in this type of flow : the inlet velocity into the compressor is generally below Mach 0.5 and the forward velocities are even lower.

However, the viscous effects, which are not presently taken into account in the computations, are undoubtedly not negligible, considering the lengths of the duct and elbow. The interaction will be studied using a transpiration method with a three-dimensional boundary layer program to be established in the near future [1].

The walls of the air intake are discretized into a set of n adjacent cells (or facets). Each facet, which is not necessarily plane, is defined by the four apexes on the wall. A distributed singularity of the "normal doublet" type with a constant intensity (see figure 1) is located in the barycenter.

The computation method used, developed by M. Rehbach at ONERA [2] includes three stages :

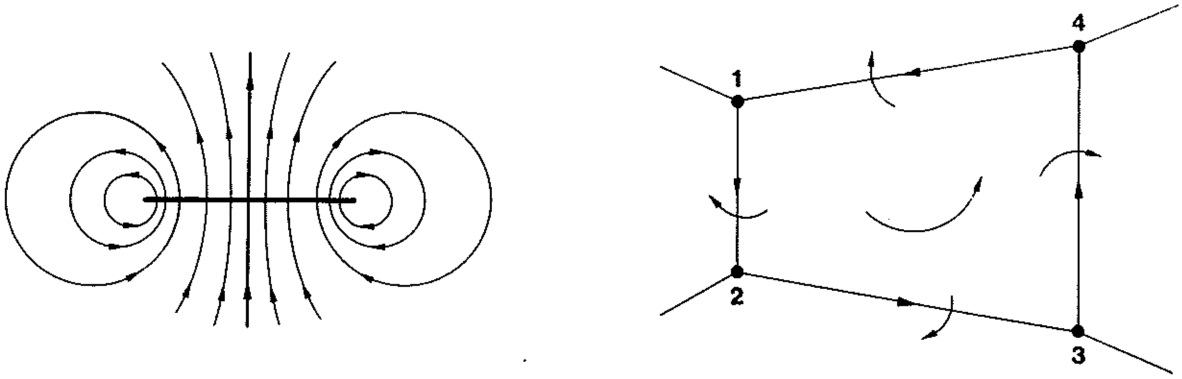

Fig. 1 : Normal doublet speed diagram and elementary panel

A) Geometric type computations

The area, the barycenter and the normal to each facet are first computed. The facets are then sorted to determine their reciprocal influences. Matrix A of the influence coefficients, with dimensions (n x n) is then established.

B) Resolution of the linear system : AX = B

- B is a vector of magnitude n whose components are the normal velocities applied to the n facets (for instance, compressor inlet velocity, transpiration velocity, upstream velocity at infinity, etc.).

- X is the unknown vector whose components are the intensities of the doublets on each of the n facets.

The problem is then purely numerical : a linear system of n equations with n unknowns must be solved as rapidly as possible, using the minimum amount of main memory space.

A Gauss-Seidel type of iterative method is used. It allows large dimension systems to be solved. In effect, only one row of the matrix is in the main memory at any time. However, the computation time rapidly increases with the number of facets. From computations made with this method, it was possible to estimate the CPU computation time required according to the number of facets. The time required to solve the linear system is proportional to n^2 (see figure 2). It should be noted that this type of solution is not therefore suited for problems involving interaction of the ideal fluid program with a transpiration method since the inverted matrix is not computed once and for all.

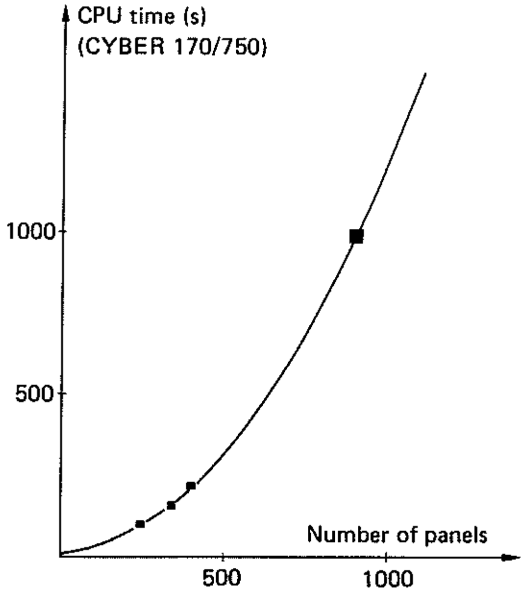

Fig. 2 : Execution time of the singularities program

C) Computation of velocity field

The velocities induced by the facet on itself and on adjacent facets are determined from the computed doublet intensities.

The velocity field in the flow on and around the obstacle is then fully determined. The streamlines can be established step by step and plotted.

3. ECUREUIL AIR INTAKE

The air intake on the single engine AS 350 ECUREUIL fitted with the ARRIEL engine made by TURBOMECA is of the static type. Although very simple in design, this type of air intake has the drawback of presenting relatively high distortions at high speed.

As the air intake is symmetrical, it is generally sufficient to represent only half of it. In the case studied, this half is discretized into 350 facets (see figure 3).

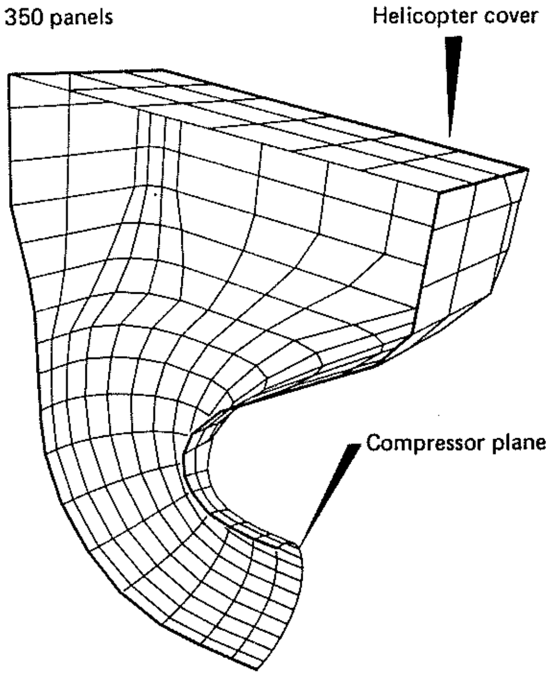

Fig. 3 : Mesh of ECUREUIL air intake

Various cases of flight were studied :

- hovering
- forward flight with various angles of attack and slip. In the case of slip angles, the symmetry is lost and it is necessary to discretize the entire air intake. It then includes 700 facets.

3.1 Hovering

To model hovering, a uniform velocity V_2 must be imposed downstream of the compressor plane. This velocity simulates intake by the engine of the airflow through the duct. In addition, the upstream velocity at infinity Vo is null during hovering. Figure 4 shows some of the results obtained with the ECUREUIL air intake during hovering. In the plane of symmetry, a large acceleration is observed on the internal part of the bend. The velocities on the walls are schematically represented by vectors normal to the surface. The high local velocity is approximately $1.5V_2$. Downstream, just before the compressor, this results in substantial recompression which can cause separation of the boundary layer, thereby causing a loss of efficiency on the compressor plane, as well as distortion. The wall velocities, on a cross-section through plane A go through a maximum : $V_{max} = 1.5\ V_2$. They are shown on the same figure. It can be seen that the high velocity is located in the plane of symmetry : this effectively corresponds to the location of the minimum curve radius.

The figure also shows the very gradual acceleration of flow on the external wall and the very low velocity at the intake, explained by the high internal contraction.

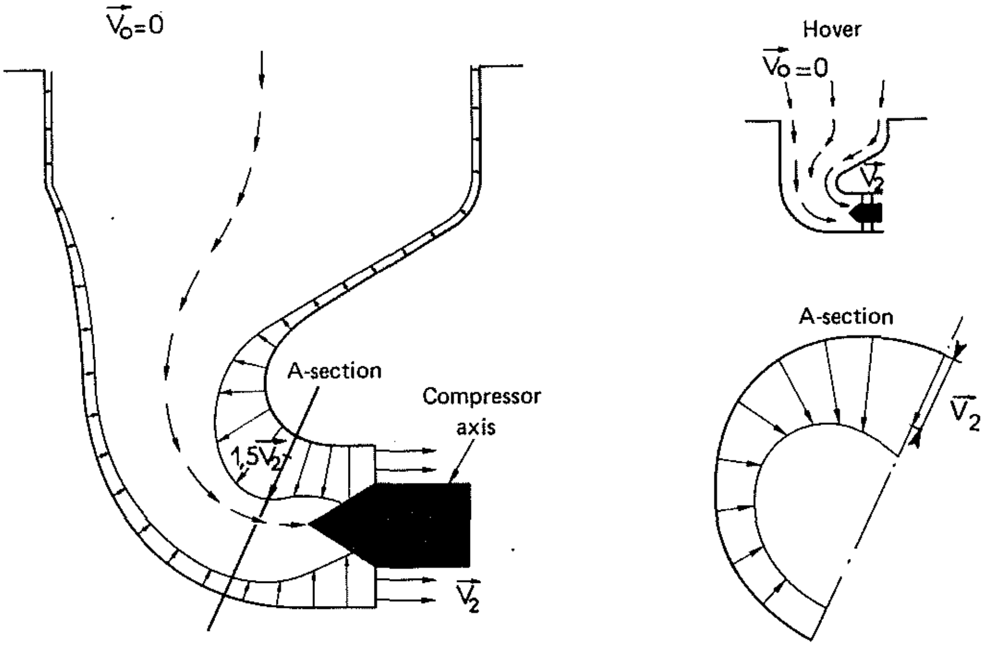

Fig. 4 : Flow in ECUREUIL air-intake

3.2 Forward Flight

The velocity at infinity is chosen as reference velocity. For the computation, its value is taken as equal to 1. The air intake is presently supposed isolated. The incoming flow is not influenced by the rotor or by the fuselage. In this application, the flow velocity V_2 on the compressor inlet plane is selected equal to 1.5 Vo. This corresponds to the case of helicopter flight at approximately 200 km/h (Mo = 0.25) for a Mach number near 0.4 on the compressor plane.

The first case processed, for which the results are given in figure 5, corresponds to a flight with null angle of attack and slip. Under such conditions, with the hypothesis of an ideal fluid, peak sections occur on the sharp edges. In fact, they are replaced by separation. The first, on the upstream edge, affects a large area on the upper section of the air intake, and the second, located on the downstream edge, affects the roof of the helicopter but is limited in size, since the external flow facilitates re-adherence. It should be noted that there is a stagnation line on the downstream surface of the air intake, halving the inlet flow : the lower part is drawn by the engine and the upper part is discharged outside.

As for hovering, a marked high local velocity occurs on the bend : it is larger ($2V_2$) and is located slightly upstream of that observed during hovering. Locally changing the curvature of the wall would improve the flow by reducing the added velocity and thereby the recompression occurring downstream.

For the second case processed, the angle of attack was held at zero. The flow remains parallel to the roof, but with a slip angle of 10 degrees . This slip angle can simulate the deflection of the external flow by the rotor. It must be recalled that for this case, the symmetry is lost and the mesh system must include the entire air intake (700 facets in the present application). It is particularly interesting to observe that the influence of the slip angle on the velocity field is small, especially around the compressor plane. This is due to the special shape of the air intake, with a high contraction ratio A_1/A_2 = 6.

Therefore, any fluctuations which occur in the upstream flow have little effect on the engine flow (see figure 5).

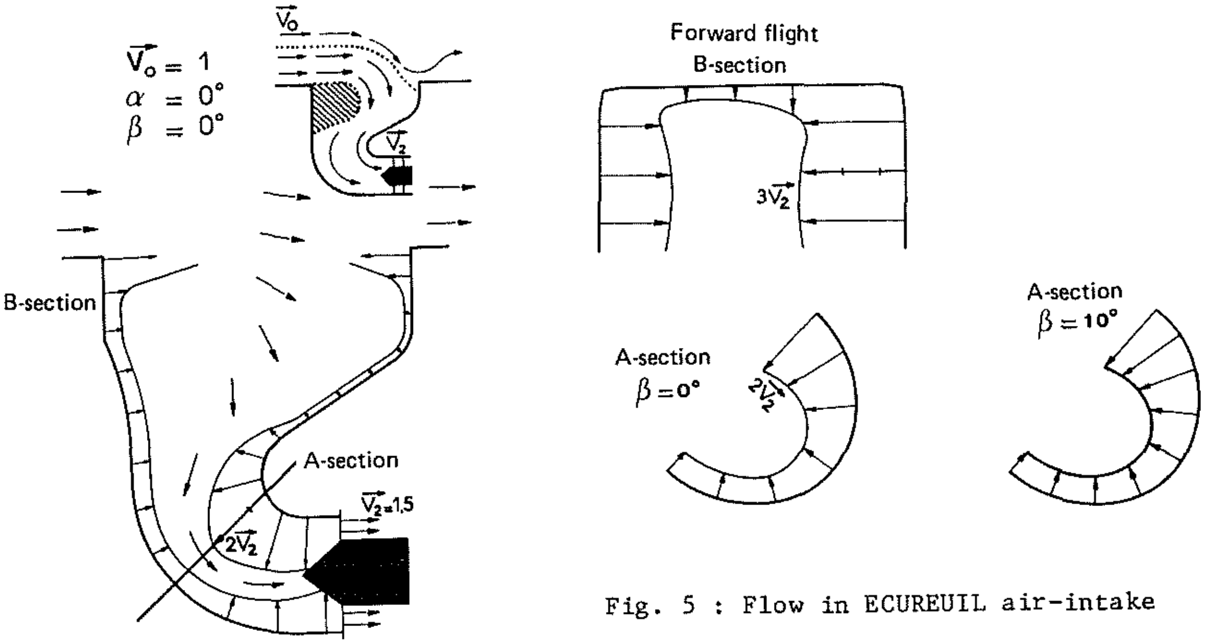

Fig. 5 : Flow in ECUREUIL air-intake

3.3 Comparison between Computational and Experimental Results

3.3.1 Testing on Compressor Test Stand

During testing on the air intake conducted by TURBOMECA on the compressor test stand (hovering), the pressure was measured along the inner and outer generating lines of the bend, in the plane of symmetry. The comparison of these measurements with the computation results for the air intake in hovering flight are shown in figure 6. The values of V/V_2 were plotted vs. the curved abscissa along the generating lines. It can be observed that the agreement between theory and experiment is relatively good, as the relative error is below 5%. The errors observed can be justified by the fact that the viscous effects were not taken into account (and are undoubtedly significant on the bend). There may also be differences in shape between the mesh system used for computations and the experimental design.

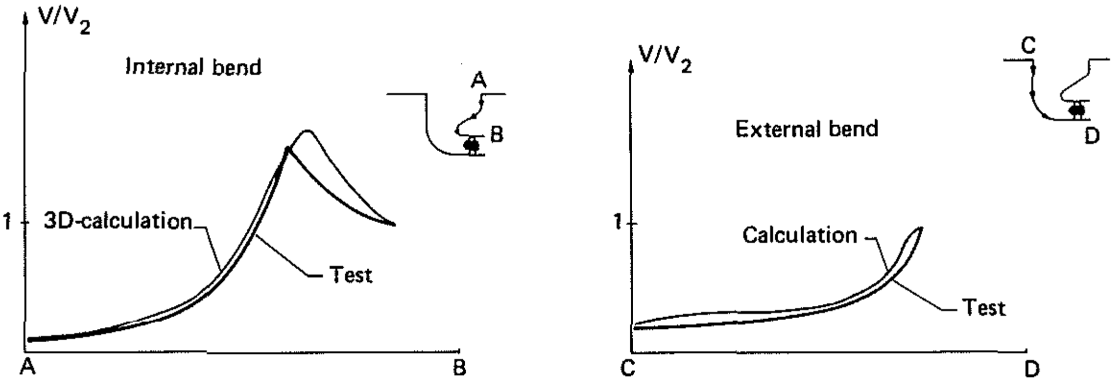

Fig. 6 : Measured and predicted internal velocities in ECUREUIL air-intake

3.3.2 Turbulent Exhaust

Observations were made with air bubbles and dye emission using a plexiglas model in the ONERA water tunnel. Various cases of flight were simulated :

- hovering
- forward flight β = 0 degrees and β= 10 for various values of intake flow rate.

The observations made during forward flight confirm the type of flow described above, in particular the existence of a substantial internal separation and a small amount of separation on the roof downstream of the air intake. This separation on the edge upstream of the air intake can have adverse effects on the working of the engine, especially due to the unsteady character and the associated pressure loss. A theoretical approach to this phenomenon has been undertaken by ONERA. The method used is that of local vortices in an incompressible three-dimensional unsteady flow [3]. Emission takes place on six points : three on the leading edge and three on the lateral edge. The observations made were qualitatively consistent with the computation results (see figure 7).

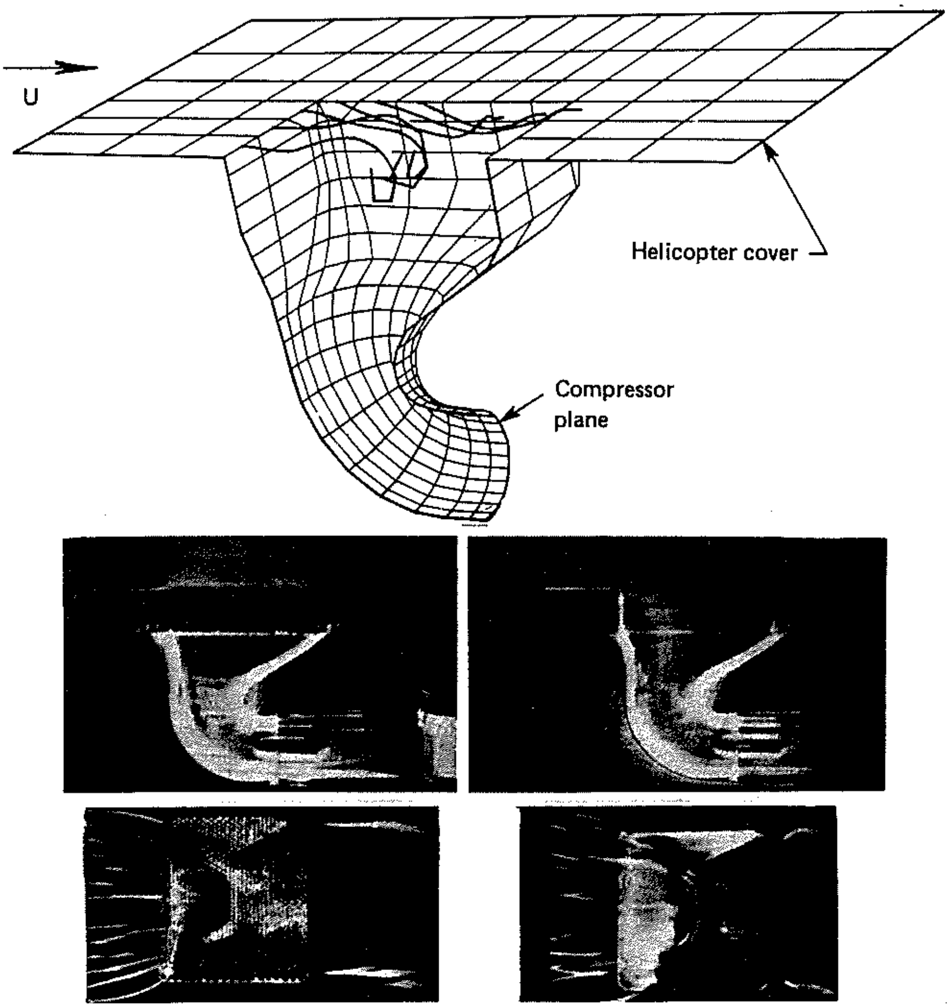

With screen

Without screen

Fig. 7 : ECUREUIL air-intake vortex flow

To remedy such phenomena, a grating was installed on the intake plane. It consists of large cells which straighten the intake flow over the entire intake area. Simulation was carried out in the water tunnel with an honeycomb grating. The corresponding films show good homogenization of the flow. A simular device was installed on the helicopter and gave good results.

4 - DAUPHIN AIR INTAKE

The DAUPHIN air intake studied next is of the dynamic type. It includes three parts (see figure 8) :

- the air intake duct and diffuser
- a 90 degree bend joining the diffuser outlet with the supply ring inlet
- a supply ring for the TURBOMECA TM333 engine.

It was deemed advisable to study the parts separately before making computations on the air intake as a whole.

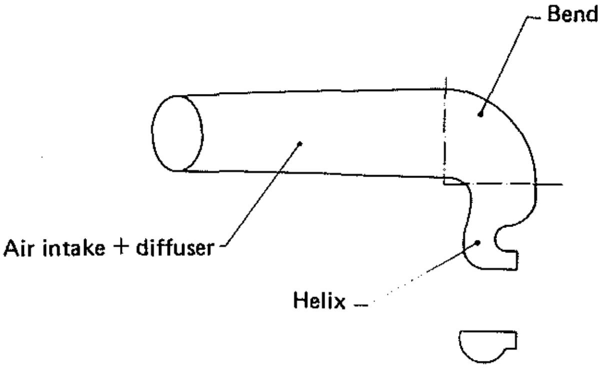

Fig. 8 : Diagram of the DAUPHIN air-intake

4.1 Air Intake Duct and Diffuser

The lips of the intake duct and the nearly straight diffuser located downstream are discretized into 344 facets for the upper part, with a symmetrical lower part. This symmetry was possible since the helicopter cowling was not represented in the computations (see figure 9).

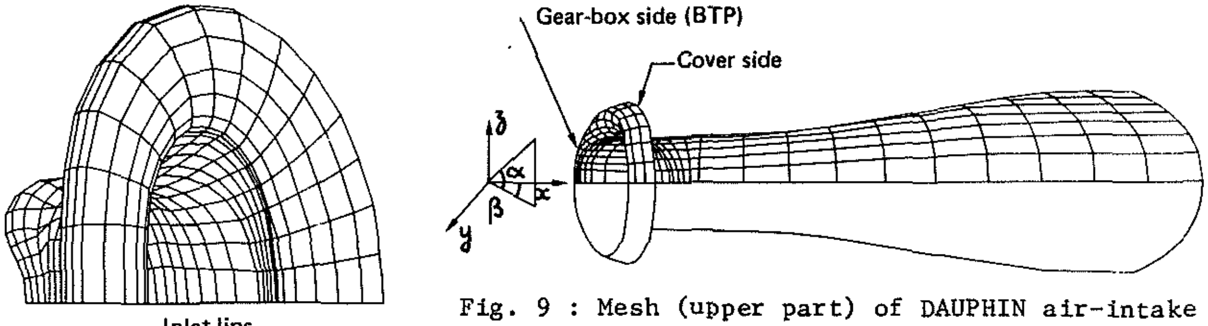

Inlet lips

Fig. 9 : Mesh (upper part) of DAUPHIN air-intake 344 panels

4.1.1 Hovering

A normal velocity V_2 with a modulus of 0.4 is imposed in the diffuser outlet plane. This hypothesis of a uniform flow at the diffuser outlet is justified by the shape of the diffuser : long and straight. In addition, the main point studied is the flow on the air intake lips, which are not greatly influenced by the downstream conditions.

The flow, in particular in the plane of symmetry, is shown in figure 10. A strong acceleration is observed on the external lip (cowling side) : $V = 5V_2$, followed by sudden recompression just downstream. This variation is undoubtedly detrimental to the stability of the boundary layer (risk of separation). Peak velocity sections are essentially located on the external lip. This lip is in effect the most stressed, by suction of the diffuser outlet flow. The variation of the streamlines in the plane of symmetry shows that the flow is roughly normal to the mean plane of the lips. The bypass on the lower lip is thus smaller and the high local velocity on this side, approximately 2.5 V_2, depends mainly on the small local cross-sectional area of the duct and not on the local curvature. The velocities on the walls in two planes are shown in this figure. For plane 1, inclined with respect to the diffuser center line and located just downstream of the lips, a uniform variation of the velocity is observed. In plane 2, located further downstream, the flow has again become fully uniform, thus in particular around the diffuser.

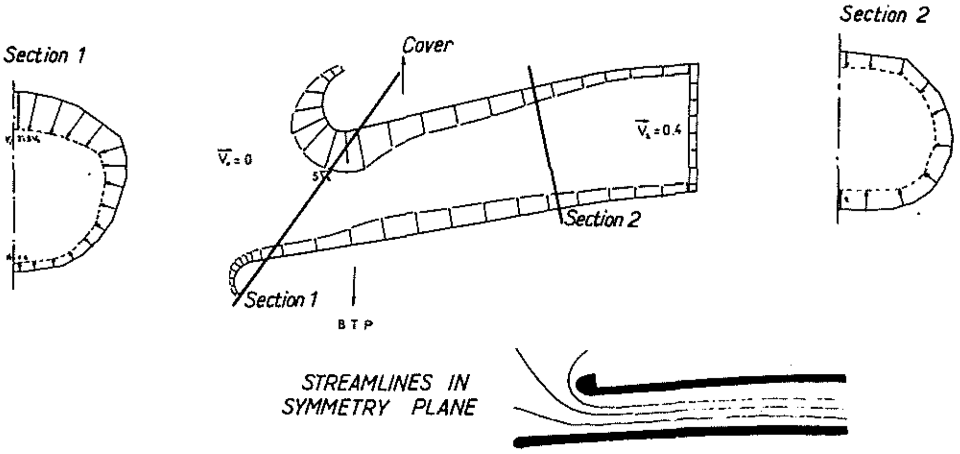

Fig. 10 : Flow in DAUPHIN air-intake : Hover

4.1.2 Forward Flight

Presently, as the air intake is studied in isolation, the angles of attack and slip are defined with respect to the diffuser. The aerodynamic field of the helicopter fuselage is not taken into account. The usptream velocity at infinity, Vo, is selected as reference : Vo = 1. The uniform normal velocity, V_2, is imposed in the diffuser outlet plane to determine the flow through the duct. For a forward flight of 300 km/h (83 m/s), the flow through the duct corresponds to a velocity of approximately 32 m/s in the diffuser outlet plane. Thus, a velocity $V_2 = 0.4$ Vo is retained. The results shown in figure 11 correspond to a case of flight such that the angles of attack and slip are null. High local velocities (approximately $4V_2$) but smaller than those applicable to hovering are located on the same facet of the external lip. Modification of the external lip geometry would therefore be beneficial in both cases of flight. The velocities in the planes defined above are similar to those obtained for hovering : in plane 1 the velocity varies regularly but much less than for hovering. The flow in plane 2 is uniform.

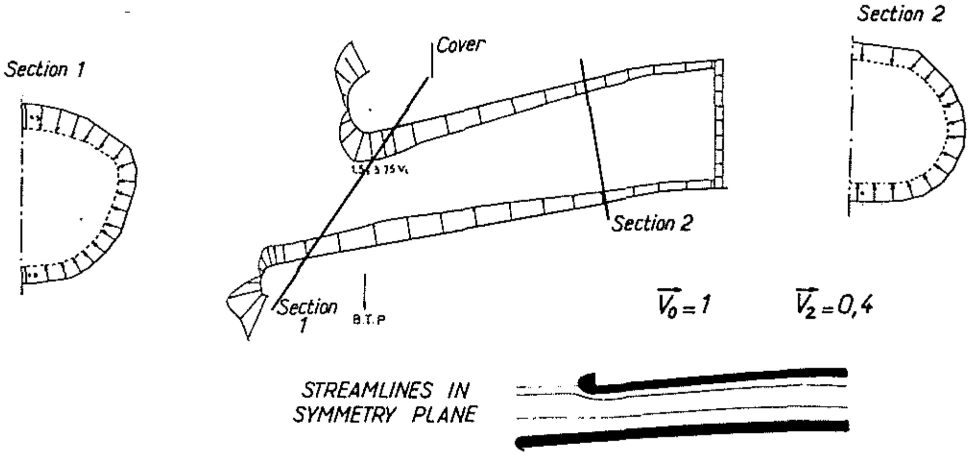

Fig. 11 : Flow in DAUPHIN air-intake forward flight ($\alpha = 0°$, $\beta = 0°$)

Various angles of attack and slip can be studied. A computation with $\beta = 10$ degrees was made : little difference was observed on the stagnation points and the velocities.

4.2 TM333 Supply Ring

The supply ring is the third part of the complete air intake. As it is symmetrical, a half-ring is discretized into 392 facets. The mesh system is shown in figure 12.

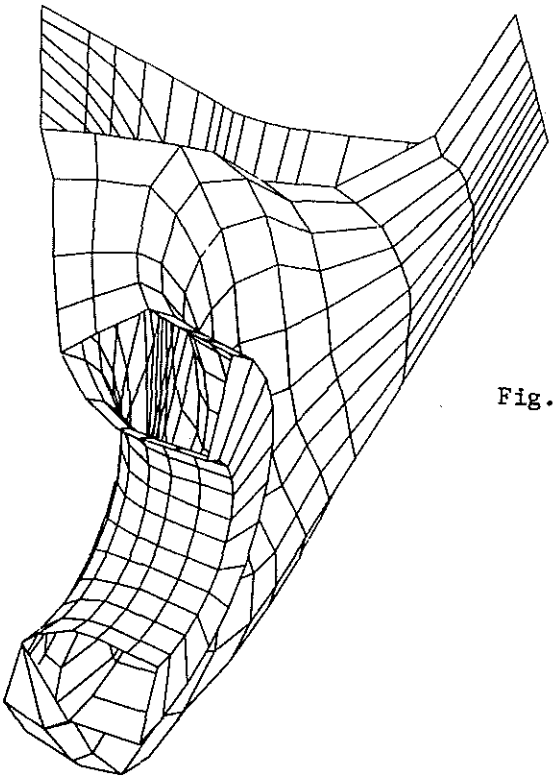

Fig. 12 : Mesh of the TM333 helix
392 panels

The internal flow is computed by assigning a uniform flow downstream of the compressor plane. In fact, as the inlet conditions into the supply ring after the bend are not known at this trial stage, the hypothesis is made of suction during hovering on the compressor test stand. The velocity downstream of the compressor is imposed as $V_2 = 1$ to simulate this suction. The flow in the plane of symmetry of the upper part of the supply ring is shown in figure 13. A slight peak of velocity of approximately $1.7V_2$ is located on the internal bend.

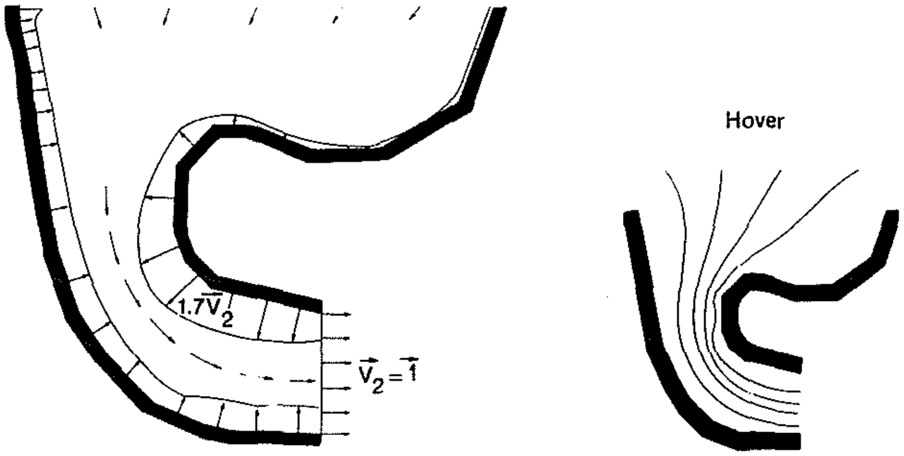

Fig. 13 : TM 333 helix (upper part)

4.3 Complete Air Intake

The DAUPHIN air intake includes the intake duct, the supply ring and the bend joining the two. The mesh for the half air intake includes 870 facets, i.e. 344 for the duct, 134 for the bend and 392 for the supply ring (see figure 14).

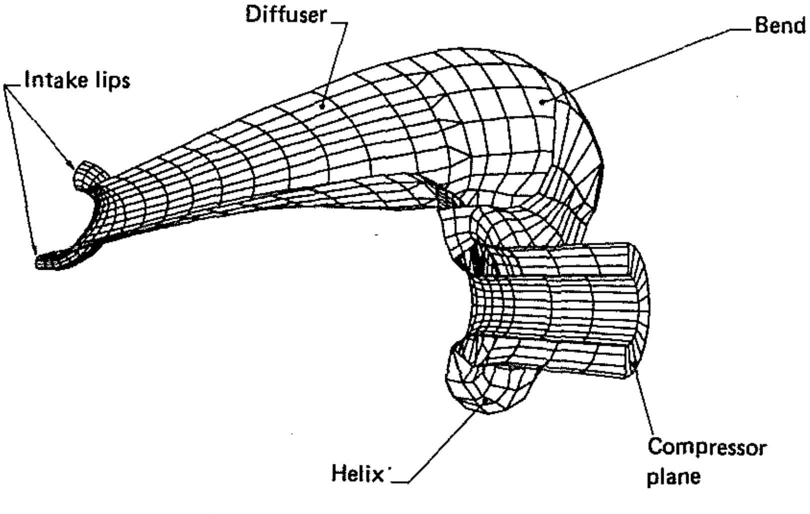

Fig. 14 : Mesh of DAUPHIN air-intake

The variations of the wall velocity in the plane of symmetry on the two generating lines during hovering are illustrated in figure 15. In spite of appearances, the high local velocity on the intake lips is identical to that observed during study of the upstream duct alone : in fact, the reference velocity in this case is different - if the velocity is referred to the diffuser outlet velocity (0.2), the ratio $V_{max}/V_{diffuser\ outlet}$ is closed to 4.0 on the leading edge, cowling side, and 2.5 on the wall. Furthermore, study of the supply ring showed an high velocity of $1.7V_2$ on the internal generating line of the bend (see figure 13), which is the value found in this case.

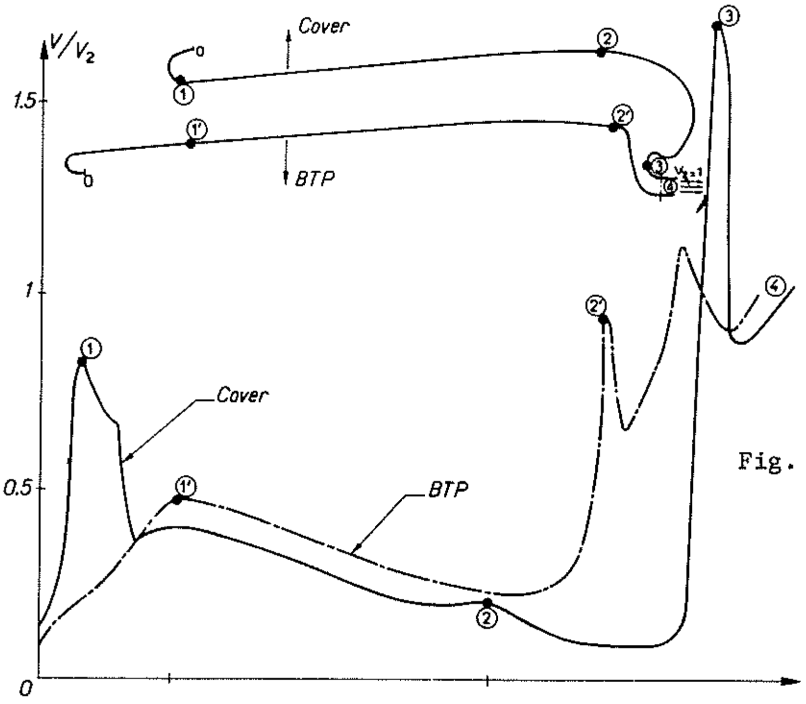

Fig. 15 : Calculated velocities in symmetry plane : hover

4.4 Comparison between Computational and Experimental Results

On a half-scale model, AEROSPATIALE/Marignane made pressure measurements on the two generating lines in the plane of symmetry of the intake duct and the bend.

The comparison between the test and the computation results for the complete air intake is given in figure 16. The location and level of the peak sections were correctly predicted. The general level of velocities is however too small. Taking into account viscous effects which lead to a reduction in the efficient cross-section decreases the difference between the computational and experimental results. It should be noted that for the lips, where the boundary layers are still fairly thin, the comparison is satisfactory.

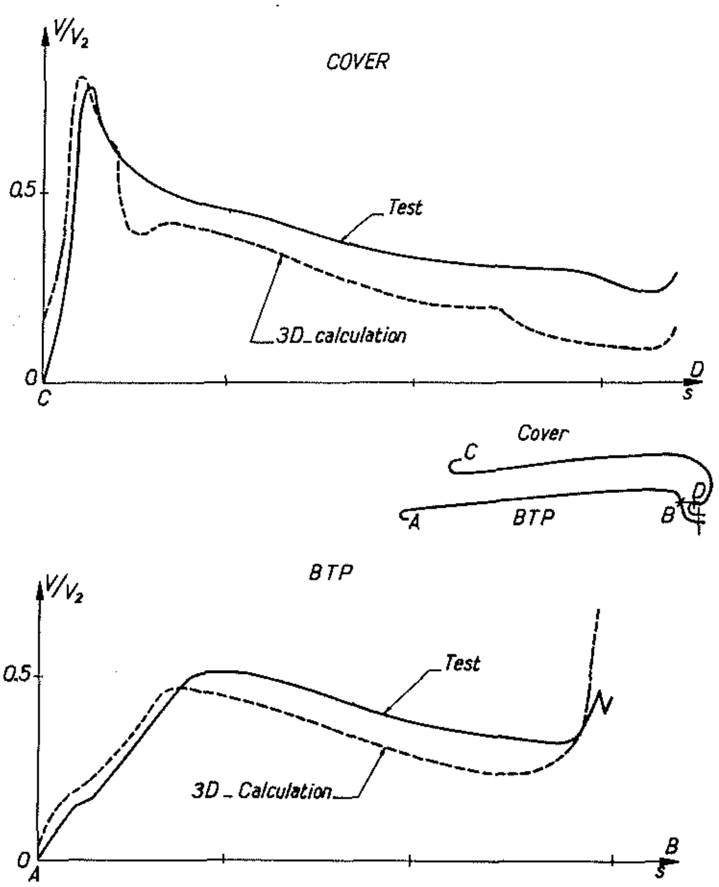

Fig. 16 : Measured and predicted internal velocities in DAUPHIN air-intake:hover

5 - CONCLUSION

Computations have been made on three-dimensional flows through helicopter air intakes. The initial applications concerning the ECUREUIL and DAUPHIN are presented. The manufacturers supplied the mesh systems and ONERA made the computations. The doublet flow pattern program used is well suited to this type of configuration. It should nevertheless be recalled that the following assumptions are presently made : incompressible flow and negligible viscous effect.

Taking into account the viscous effects by weak interaction with a three-dimensional boundary layer program should make it possible to predict any separation on :

- the lip, cowling side
- the junction bend
- the supply ring outlet.

The accuracy of computation should also be improved.

Furthermore, the unsteady flow method with exhaust vortices makes it possible to represent extensive separation areas.

It should however be noted that the use of this method becomes difficult and time-consuming as the number of facets increases. In the case of the DAUPHIN air intake, considering the particular geometyr, computations on separate parts give results very close to those obtained by computation on the complete assembly, while substantially decreasing the computation time and the risks of error.

REFERENCES

[1] B. Aupoix and J. Cousteix - Three dimensional boundary layers : turbulent modelisation and calculation methods - Second Symposium on Turbulent Shear Flows, Imperial College, London (1979).

[2] C. Rehbach - Calcul numérique d'écoulements tridimensionnels instationnaires avec nappes tourbillonnaires - La Recherche Aérospatiale, 1977-5 (1977).

[3] C. Rehbach - Numerical calculation of three-dimensional unsteady flows with vortex sheets - AIAA Paper 78.111 (1978).